Service Bulletin

Char-Lynn®
Hydraulic Motor Drives

No. 1100
Revised October, 1993

This document contains information that will allow the reader to identify Char-Lynn hydraulic motor drives and the motors into which they fit. This information is provided to help Eaton customers who may have unknown drives in stock.

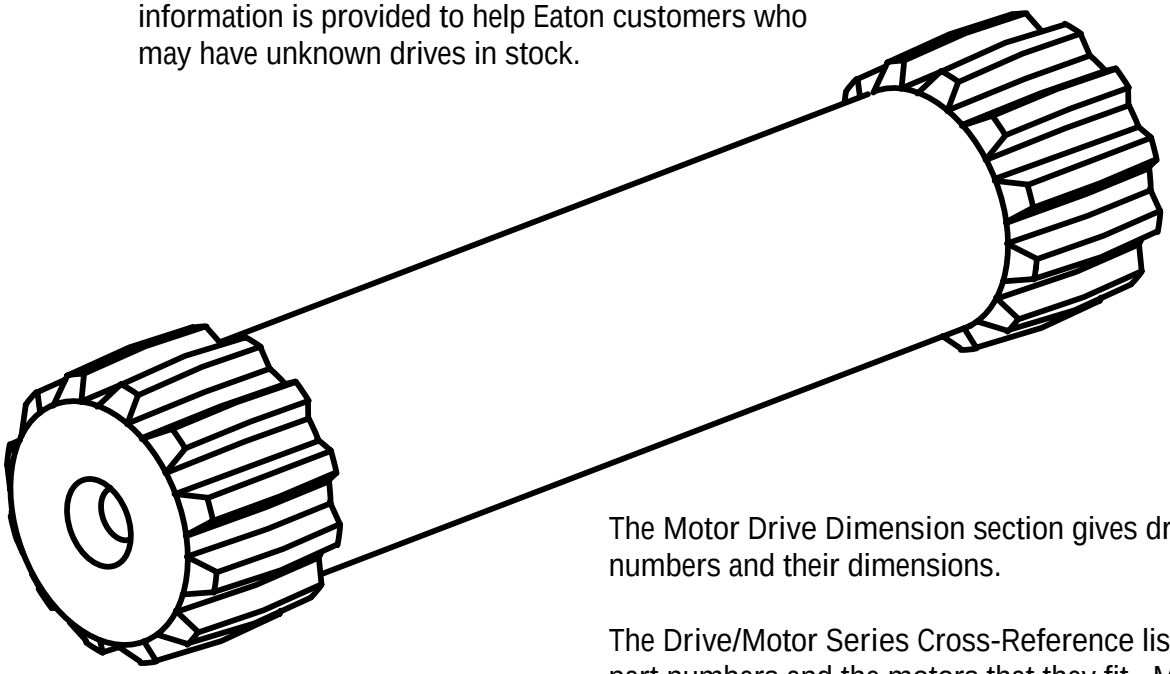

The Motor Drive Dimension section gives drive part numbers and their dimensions.

The Drive/Motor Series Cross-Reference lists drive part numbers and the motors that they fit. Motors are identified by series, revision number and displacement.

Motor Drive Dimensions

Drive Part Number	Figure Number	Dim. A	Dim. B	Dim. C
602 - 000	1	1.05	3.00	.70
616 - 000	1	1.05	3.22	.80
6167 - 000	2	1.68	7.41	1.44
6221 - 000	1	1.68	6.68	1.40
6395 - 000	1	1.68	6.19	1.40
6610 - 000	4	1.05	3.81	.94
6611 - 000	4	1.05	4.10	.94
6947 - 000	1	1.26	3.58	.89
6948 - 000	1	1.26	3.75	.89
6949 - 000	1	1.26	3.91	.89
7004 - 000	1	1.49	4.20	1.07
7005 - 000	1	1.49	4.34	1.07
7006 - 000	1	1.49	4.55	1.07
8161 - 000	1	1.05	3.52	.70
8289 - 000	1	1.06	3.45	.78
8359 - 000	1	1.06	3.73	.78
8360 - 000	1	1.06	4.10	.78
8361 - 000	1	1.06	4.54	.78
8634 - 000	1	1.05	4.23	.79
8664 - 000	1	1.05	3.61	.80
201111 - 001	1	1.05	3.10	.72
201111 - 002	1	1.05	3.33	.80
201111 - 003	1	1.05	3.49	.77
201111 - 004	1	1.05	3.70	.80
201111 - 005	1	1.05	3.90	.82
201111 - 006	1	1.05	4.16	.82
201111 - 007	1	1.05	4.52	.83
201111 - 008	1	1.05	4.97	.84
201111 - 009	1	1.05	5.43	.86
21371 - 004	1	1.06	3.42	.77
21371 - 005	2	1.06	3.68	.80
21371 - 006	2	1.06	4.04	.82
21371 - 007	3	1.06	4.49	.84
21371 - 008	3	1.06	5.12	.85
21371 - 009	1	1.06	2.99	.76
21371 - 010	1	1.06	3.17	.76
21371 - 012	3	1.06	5.83	.89
21372 - 001	1	1.29	3.49	.96
21372 - 002	1	1.29	3.66	.96
21372 - 004	2	1.29	4.23	1.00
21372 - 005	2	1.29	4.65	1.00
21372 - 007	1	1.29	5.12	1.00
21372 - 008	1	1.29	5.83	1.12
21373 - 001	1	1.51	4.14	1.11
21373 - 002	1	1.51	4.36	1.11
21373 - 003	2	1.51	4.65	1.20
21373 - 004	2	1.51	5.00	1.20
21373 - 005	2	1.51	5.44	1.20
21373 - 006	2	1.51	7.59	1.20
22189 - 000	1	1.05	3.77	.82
22190 - 000	1	1.05	4.02	.82
22191 - 000	1	1.05	4.77	.82
22250 - 000	1	1.05	3.15	.69
22251 - 000	1	1.05	3.40	.76
22252 - 000	1	1.05	3.54	.79
22253 - 000	1	1.05	3.50	.82
23961 - 001	2	1.05	5.57	.93

Figure 1

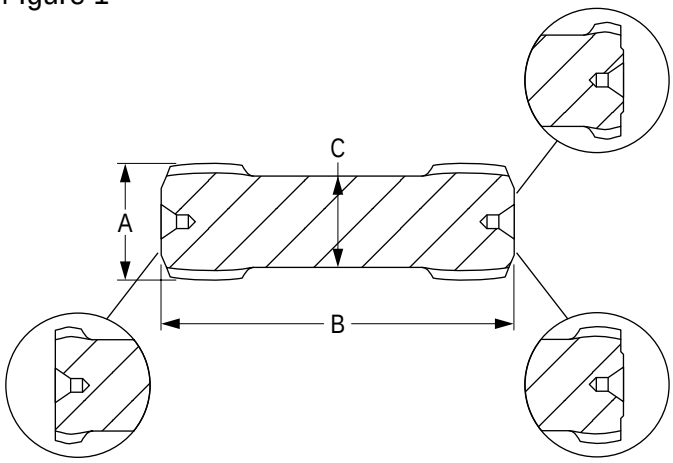

Figure 2

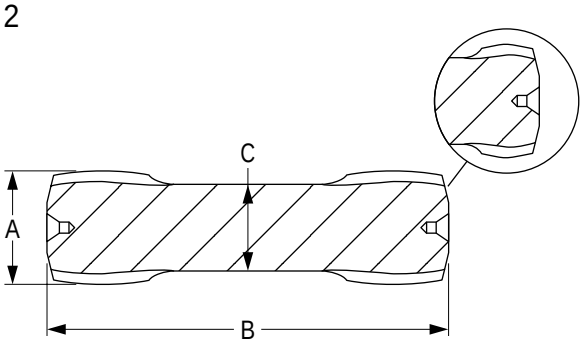

Figure 3

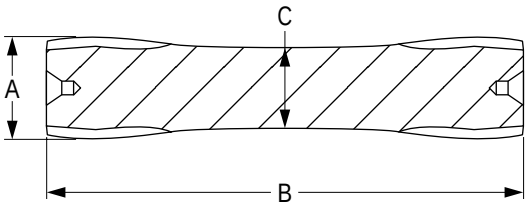

Figure 4

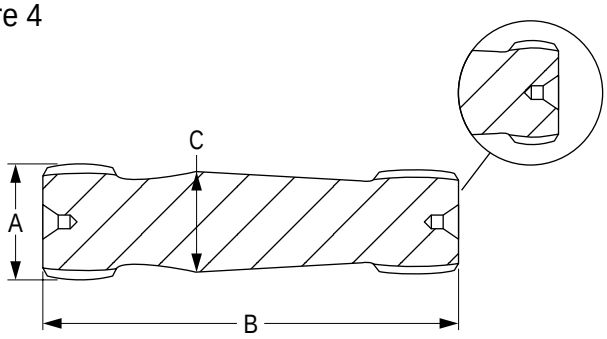

Drive/Motor Series Cross-Reference

Drive Part Number	Motor Series	Revision Number	Displ. in³	Displ. cm³
602 - 000	A	3	2.2	36
602 - 000	H	9	2.2	36
602 - 000	R	1, 2	2.2	36
602 - 000	S	11	2.2	36
602 - 000	A	1, 2, 3	2.8	46
602 - 000	H	9	2.8	46
602 - 000	H	5, 7	3.0	49
602 - 000	R	1	3.0	49
602 - 000	A	1, 2	4.2	69
602 - 000	S	10	4.2	69
602 - 000	H	5, 7, 8	4.5	74
602 - 000	S	8, 9	5.8	95
616 - 000	R	1, 2	4.0	66
616 - 000	S	11	4.0	66
616 - 000	R	1	4.9	80
616 - 000	A	1, 2, 3	5.9	97
616 - 000	H	9	5.9	97
616 - 000	S	10	5.9	97
616 - 000	H	5, 7, 8	6.2	102
616 - 000	A	1, 2	9.7	159
616 - 000	S	8, 9	9.7	159
616 - 000	H	5, 7	10.3	169
616 - 000	S	8, 9	11.7	192
616 - 000	H	5, 7	11.9	195
616 - 000	H	5, 7	14.9	244
616 - 000	H	7	16.9	277
616 - 000	H	5	17.9	293
616 - 000	H	5, 7	23.8	390
6167 - 000	10,000	2, 3, 4	57.4	940
6221 - 000	10,000	2, 3, 4	29.3	480
6221 - 000	10,000	2, 3, 4	40.6	665
6395 - 000	10,000	2, 3, 4	21.0	345
6610 - 000	S	7	5.8	95
6611 - 000	S	7	9.7	160
6947 - 000	4000	3	6.6	108
6947 - 000	4000	3	10.0	164
6948 - 000	4000	3	12.0	197
6949 - 000	4000	3	14.0	230
6949 - 000	4000	3	17.0	279
7004 - 000	6000	2, 3, 4	12.0	197
7005 - 000	6000	2, 3, 4	14.0	229
7006 - 000	6000	2, 3, 4	17.0	279
7006 - 000	6000	2, 3, 4	20.0	328
7006 - 000	6000	2, 3, 4	24.0	393
7006 - 000	6000	2, 3, 4	30.0	492
8161 - 000	S	7	4.2	69
8289 - 000	2000	3	9.6	155
8359 - 000	2000	3	11.9	195
8360 - 000	2000	3	14.9	245
8361 - 000	2000	3	18.7	305
8634 - 000	S	7	11.2	183
8634 - 000	S	7	14.0	229
8634 - 000	S	7	16.9	277
8634 - 000	S	7	22.5	369
8664 - 000	R	1	8.0	131
8664 - 000	A	3	9.7	160
8664 - 000	H	9	9.7	160
8664 - 000	S	10	9.7	160
8664 - 000	H	8	10.3	169
8664 - 000	H	8	11.9	195
8664 - 000	H	9	14.9	244
8664 - 000	H	8	16.9	277
8664 - 000	S	8, 9	16.9	277
8664 - 000	H	8	23.8	390
201111 - 001	R	2	3.0	49
201111 - 001	S	11	3.0	49
201111 - 002	R	2	4.9	80
201111 - 002	S	11	4.9	80
201111 - 003	R	2	6.2	102
201111 - 003	S	11	6.2	102
201111 - 004	R	2	8.0	131
201111 - 004	S	11	8.0	131
201111 - 005	R	2	9.6	157
201111 - 005	S	11	9.6	157
201111 - 006	R	2	11.9	195
201111 - 006	S	11	11.9	195
201111 - 007	R	2	14.9	244
201111 - 007	S	11	14.9	244
201111 - 008	R	2	18.7	306
201111 - 008	S	11	18.7	306
201111 - 009	S	11	22.6	370
201111 - 009	R	2	24.0	393
21371 - 004	2000	5, 6	8.0	130
21371 - 004	2000	4, 5, 6	9.6	155
21371 - 005	2000	4, 5, 6	11.9	195
21371 - 006	2000	4, 5, 6	14.9	245
21371 - 007	2000	4, 5, 6	18.7	305
21371 - 008	2000	4, 5, 6	24.0	393
21371 - 009	2000	5, 6	4.9	80
21371 - 010	2000	5, 6	6.2	100
21371 - 012	2000	6	30.0	490
21372 - 001	4000	4, 6	6.7	110
21372 - 002	4000	4, 6	7.9	130
21372 - 003	4000	4, 6	9.9	160
21372 - 003	4000	4, 6	15.0	245
21372 - 004	4000	4, 6	12.5	205
21372 - 004	4000	4, 6	19.0	311
21372 - 005	4000	4, 6	24.0	393
21372 - 007	4000	4, 6	30.0	495
21372 - 008	4000	4, 6	38.0	495
21373 - 001	6000	5	11.9	195
21373 - 002	6000	5	15.0	245
21373 - 003	6000	5	19.0	311
21373 - 004	6000	5	23.9	392
21373 - 005	6000	5	29.9	490
21373 - 006	6000	5	59.9	982
22189 - 000	R	1	9.6	157
22189 - 000	A	3	11.3	185
22189 - 000	H	9	11.3	185
22189 - 000	S	10	11.3	185
22189 - 000	S	8, 9	22.5	369
22190 - 000	R	1	11.9	195
22190 - 000	A	1	14.1	231
22190 - 000	H	9	14.1	231
22190 - 000	S	10	14.1	231
22191 - 000	R	1	18.7	306
22191 - 000	A	3	22.6	370
22191 - 000	H	9	22.6	370
22191 - 000	S	10	22.6	370
22250 - 000	A	3	3.6	59
22250 - 000	H	9	3.6	59
22250 - 000	S	10	3.6	59
22250 - 000	A	3	4.5	74
22250 - 000	H	9	4.5	74
22250 - 000	S	10	4.5	74
22251 - 000	R	1	6.2	102
22251 - 000	A	3	7.3	120
22251 - 000	H	9	7.3	120
22251 - 000	S	10	7.3	120
22251 - 000	S	8, 9	14.0	229
22252 - 000	A	3	8.9	146
22252 - 000	H	9	8.9	146
22252 - 000	S	10	8.9	146
22253 - 000	R	1	14.9	244
22253 - 000	A	3	17.9	293
22253 - 000	H	9	17.9	293
22253 - 000	S	11	17.9	293
23961 - 001	R	1	24.0	393

Eaton Corporation
Hydraulics Division
15151 Hwy. 5
Eden Prairie, MN 55344
Telephone 612/937-9800
Fax 612/937-7130

Eaton Ltd.
Hydraulics Division
Glenrothes, Fife
Scotland, KY7 4NW
Telephone 44/592-771-771
Fax 44/592-773-184

Form No. 1100
September, 1983

Copyright Eaton Corporation, 1983
All Rights Reserved
Printed in USA