EATON | Char-Lynn

VIS Bearingless Motors
30 Series

Parts and Repair Information

-005

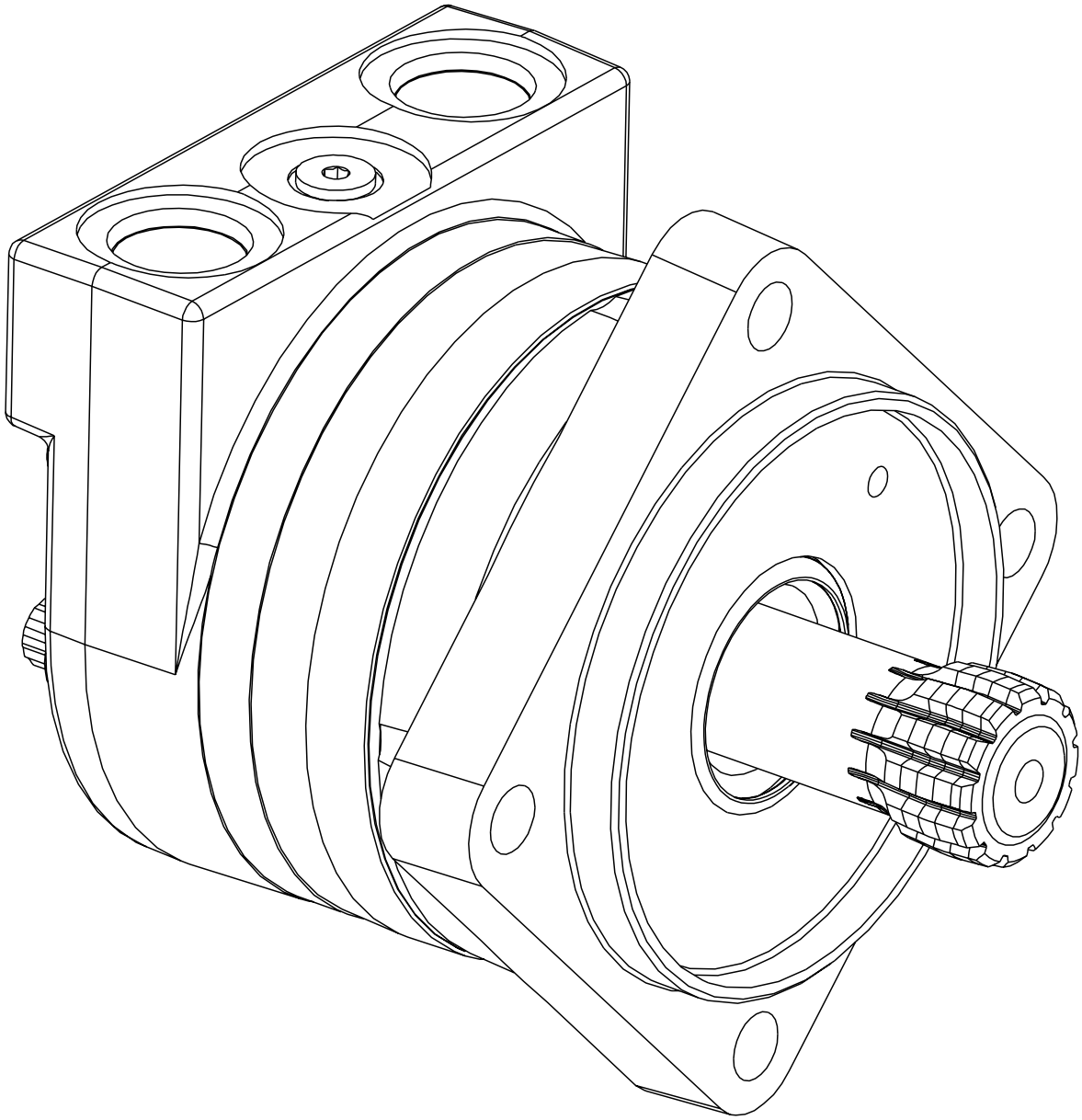

VIS Bearingless Motors - 30 Series

Table of Contents

Exploded View 2
Part List 3
Disassembly 4
Reassembly 5
How to Order Replacement Parts 8

Exploded View

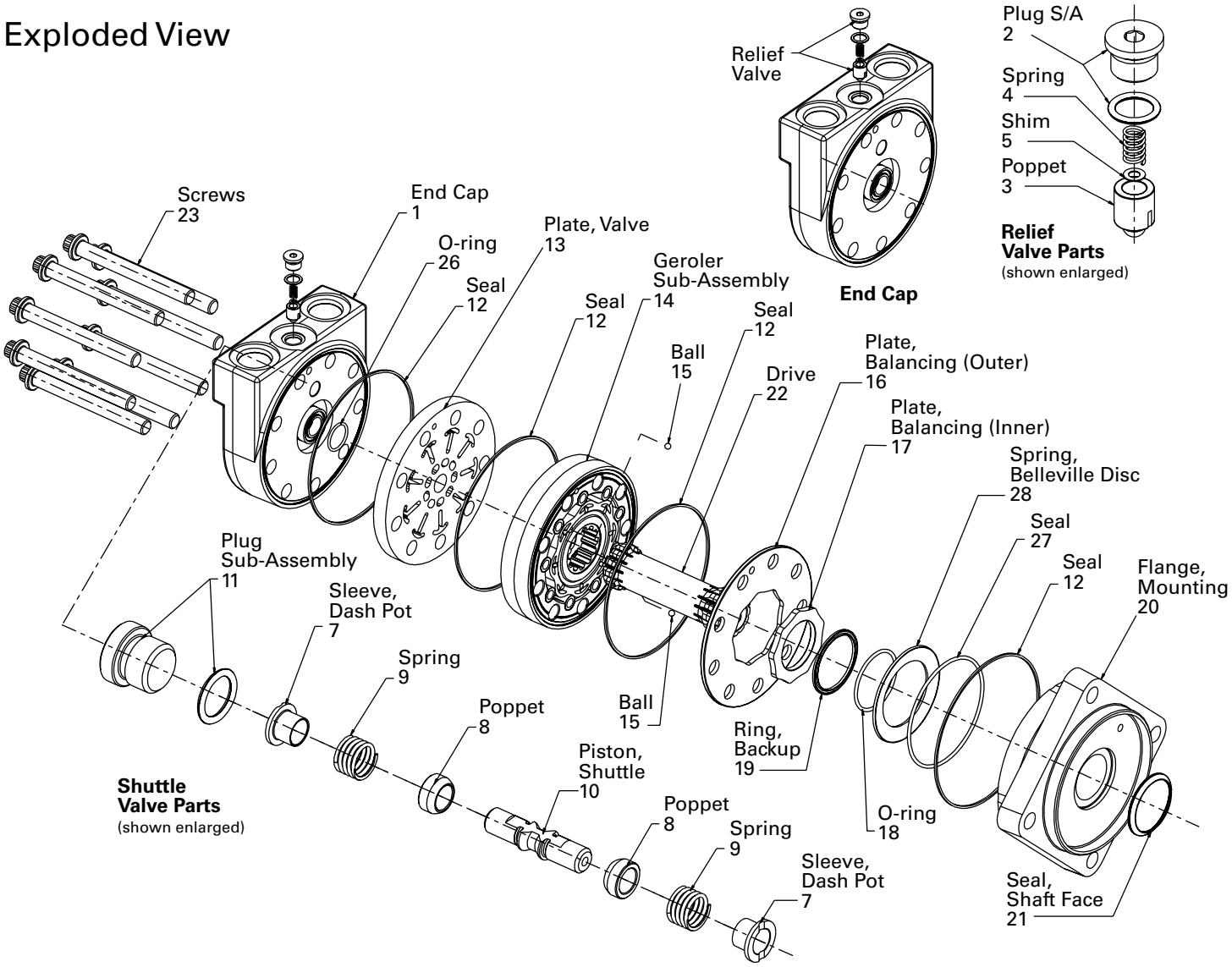

VIS Bearingless Motors - 30 Series

Parts List

	Ref. No.	Part No.	Description	Quantity
	1	5986496-001	End Cap Assembly 1-1/16-12 O-ring Ports (2)	1
		5986496-002	End Cap Assembly G 3/4 (BSP) O-ring Ports (2)	1
	2	9072-004	Plug Sub Assembly	1
X		250003-905	O-ring	1
	3	113538-001	Poppet (for relief valve unit only)	1
	4	113186-001	Spring (for relief valve unit only)	1
	5	16048-500	Shim (for relief valve unit only)	A/R
	7	112126-001	Sleeve, Dash Pot	2
	8	8567-000	Poppet	2
	9	230079-000	Spring	2
	10	201494-002	Piston, Shuttle	1
	11	9266-006	Plug O-ring Sub Assembly	1
X		250003-906	O-ring	1
X	12	14559-015	Seal	4
	13	5986477-001	Plate, Valve	1
	14	*	Geroler	1
	15	285020-060	Ball	2
	16	5986478-001	Plate, Balancing (Outer)	1
	17	203516-001	Plate, Balancing (Inner)	1
X	18	112530-135	O-ring	1
X	19	14649-001	Ring, Back-up	1
	20	4994875-001	Flange, Mounting 9/16-18 O-ring Case Drain Port	1
		4994875-002	Flange, Mounting G 1/4 (BSP) O-ring Case Drain Port	1
X	21	9080-001	Seal, Shaft Face	1
	22	*	Drive	1
	23	*	Screw, 12 PT	9
X	26	250183-002	O-ring	1
X	27	112530-179	Seal	1
	28	203542-001	Spring, Belleville Disc	1
		9900348-000	Seal Kit - Contains Parts Indicated by X	

* = See Chart
A/R = As Required

Displacement cm^3/r [in^3/r]	Ref. No. 14 Geroler	Width mm [inch]	Ref. No. 22 Drive	Length mm [inch]	Ref. No. 23 Cap Screw	Length mm [inch]
325 [19.8]	5986481-002	28,9 [1.14]	114005-002	129,0 [5.08]	114154-003	115,3 [4.54]
400 [24.4]	5986481-004	35,6 [1.40]	114005-004	135,6 [5.34]	114154-005	122,4 [4.82]
505 [30.7]	5986481-006	44,7 [1.76]	114005-006	144,8 [5.70]	114154-006	131,1 [5.16]
570 [34.9]	5986481-010	50,8 [2.00]	114005-010	151,1 [5.95]	114154-007	135,6 [5.34]

VIS Bearingless Motors - 30 Series

Disassembly

Tools Required

- 1/4 inch Hex Key (Relief Valve Plug)
- 3/16 inch Hex Key (Shuttle Valve Plug)
- 1/2 Socket (12 Point Drive)
- Torque wrench - 68 Nm [600 lb-in] capacity

Disassembly

1. Cleanliness is extremely important when repairing hydraulic motors. Work in a clean area. Before disconnecting the hydraulic motor thoroughly clean the exterior. Remove motor from application and drain the oil from the motor before disassembly.

2. Remove the 9 cap screws and disassemble the motor in the vertical position as shown in Figures 1. Note placement of small ball checks in Geroler.

3. Remove shuttle valve (and relief valve if applicable) from end cap.

4. Check all mating surfaces. To reduce the chance of leakage, replace any parts that have scratches or burrs. Wash all metal parts in clean solvent. Blow them dry with pressurized air. Do not wipe parts dry with paper towels or cloth as lint in a hydraulic system will cause damage.

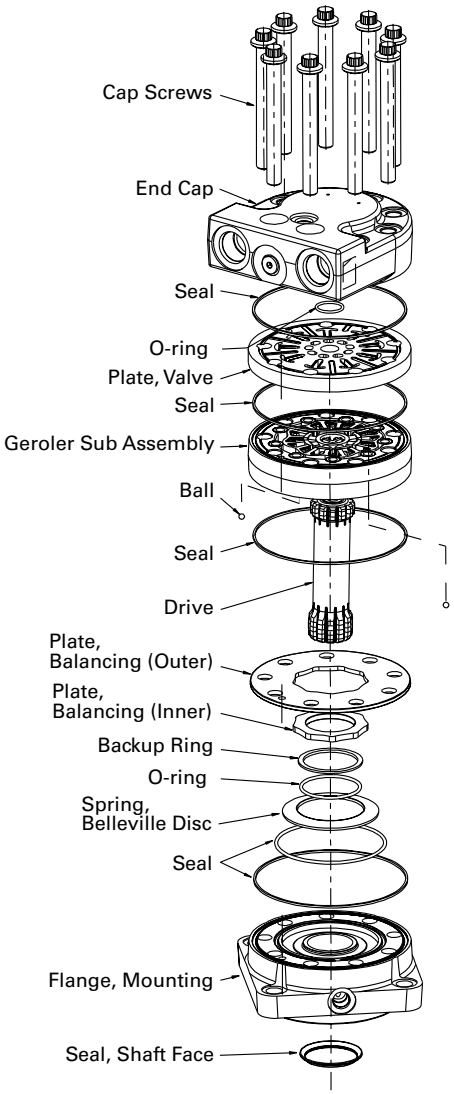

Figure 1

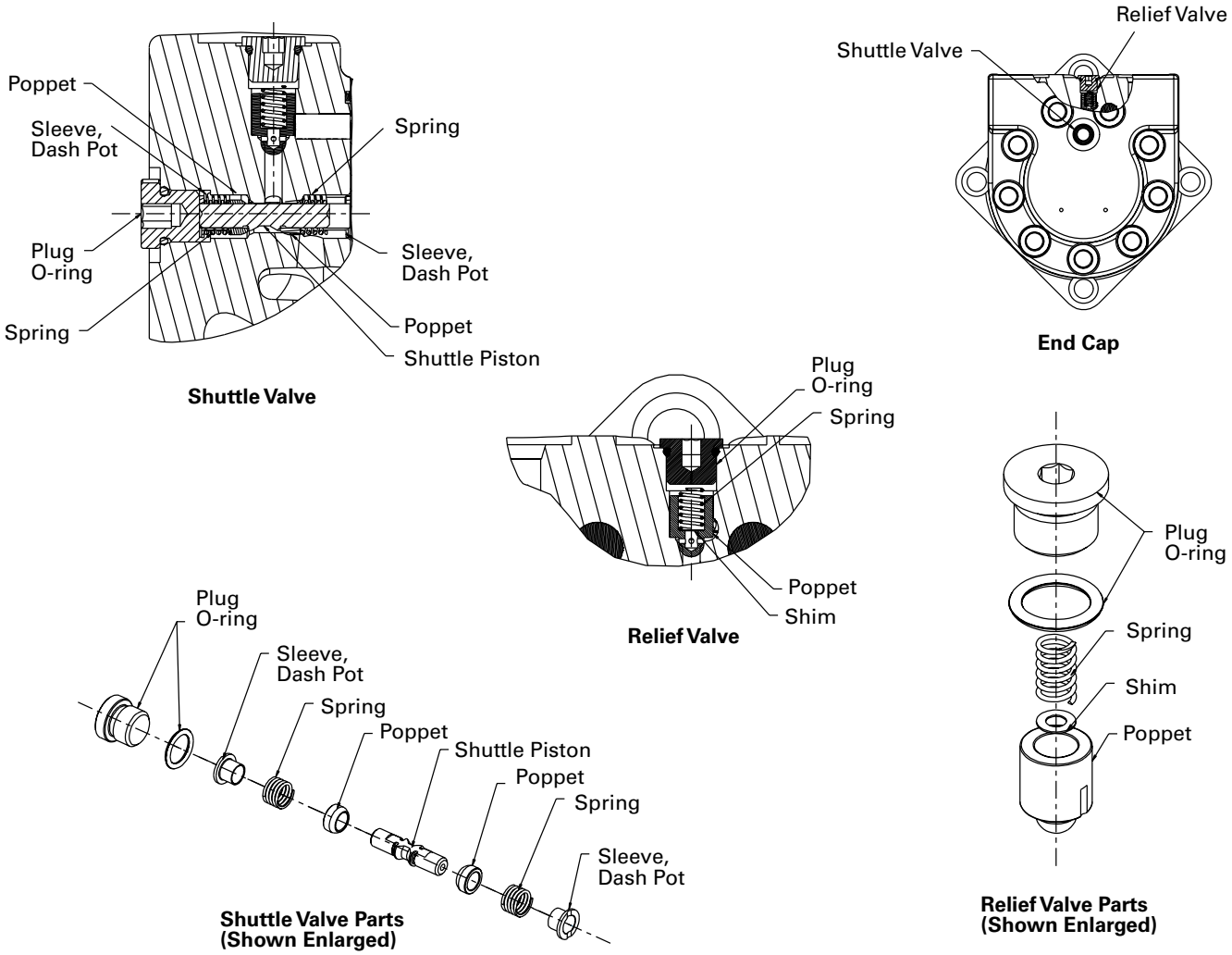

Figure 2

Reassembly

Note: Always use new seals when reassembling hydraulic motors. Refer to parts list for seal kit number and replacement parts.

Important: During reassembly, lubricate the new seals with a petroleum jelly such as Vaseline®. Also lubricate machined surfaces with clean hydraulic fluid.

5. Install one poppet, spring and dash pot into shuttle valve bore from valve plate side of end cap.

6. Install shuttle piston from opposite end of shuttle valve cavity.

7. Install one shuttle valve poppet, spring and dash pot onto piston.

8. Install one shuttle valve threaded internal hex plug with o-ring. Shuttle plug threads may have light coat of oil or preservative. Torque plug to 360+/-36 lb-in.

9. For a motor with low pressure relief valve, install poppet, shims, spring and plug. Plug threads may have light coat of oil or preservative. Torque plug to 180+/-18 lb-in.

VIS Bearingless Motors - 30 Series

Reassembly

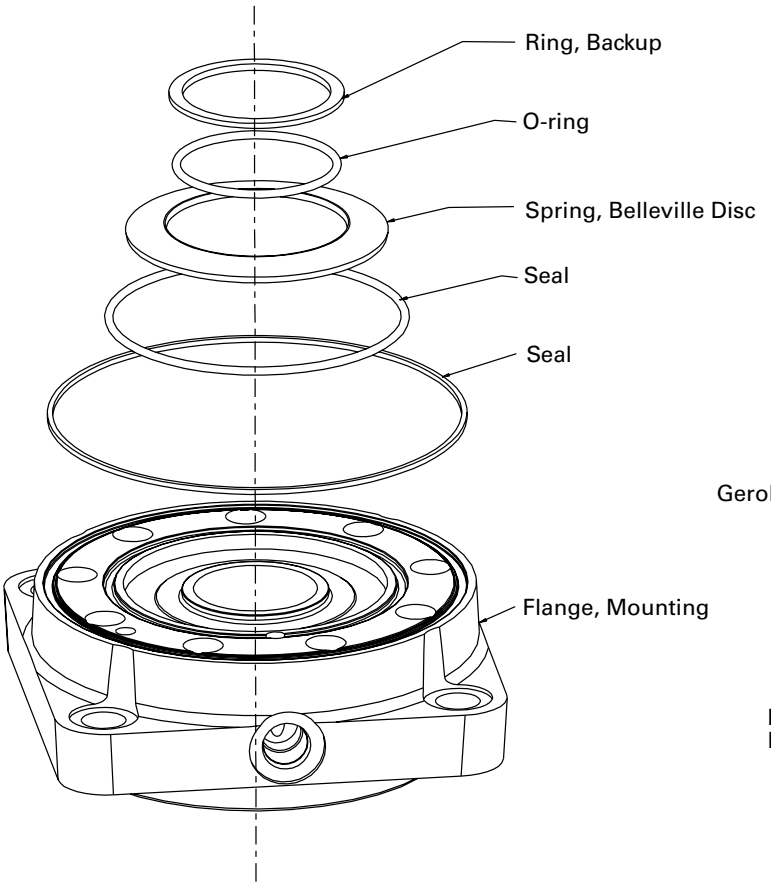

Figure 3

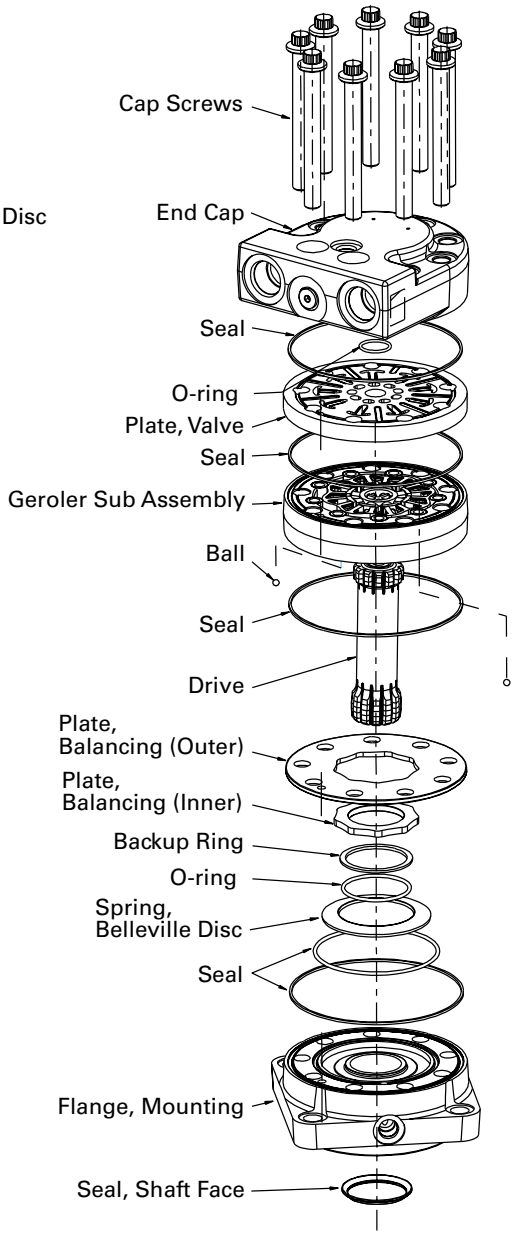

Figure 4

Flange Assembly

10. Position flange on workbench with the o-ring grooves face down and install face seal (54,1 [2.13] OD).

11. With mounting flange o-ring grooves up (see Figure 3), install two o-ring seals (130,9 [5.16] ID & 92,3 [3.63] ID) into flange. Install back-up ring (56,1 [2.21] OD) over o-ring (48,9 [1.93] ID) with flat side up. Back-up ring and o-rings may be greased to assist in retaining parts.

Final Assembly

12. Place drive in build fixture. Place mounting flange (seal grooves up) over drive.

13. Install Belleville spring (concave side down) in groove in mounting flange.

14. Place outer and inner balance plate on mounting flange. Align shuttle flow cavity of outer balance plate with shuttle flow cavity of mounting flange.

15. Place two balls into seats of star (one per seat). Retain balls with grease.

16. Install o-ring seals (130,9 [5.16] ID) in o-ring grooves on both sides of Geroler. Seal on balance ring side of Geroler must have sufficient coating of petroleum jelly to assist in retaining seal in the groove. Place Geroler assembly over outer balance plate. Make sure that balls are in their seats. Align shuttle flow cavity of Geroler with shuttle flow cavity of outer balance plate.

17. Install valve plate into Geroler. Align bolt holes and shuttle flow hole on valve plate with mating holes on Geroler.

18. Place end cap on work bench name plate side down, seal grooves up. Install o-rings (130,9 [5.16] ID & 21,0 [0.83] ID) into seal grooves. Seals must have sufficient coating of petroleum jelly to assist in retaining seal in the groove.

19. Carefully invert end cap and place onto valve plate. Make sure shuttle flow cavities are aligned.

20. Install nice cap screws lubricated with DTE-26/DTE-24. Pre-torque each in a crisscross pattern (see Figure 5) to 60+/-10 lb-ft. Finally, in a crisscross pattern, tighten screws to 105+/-5 lb-ft.

Note: Damage to the balance plate will occur if these bearingless motors are lifted by the drive.

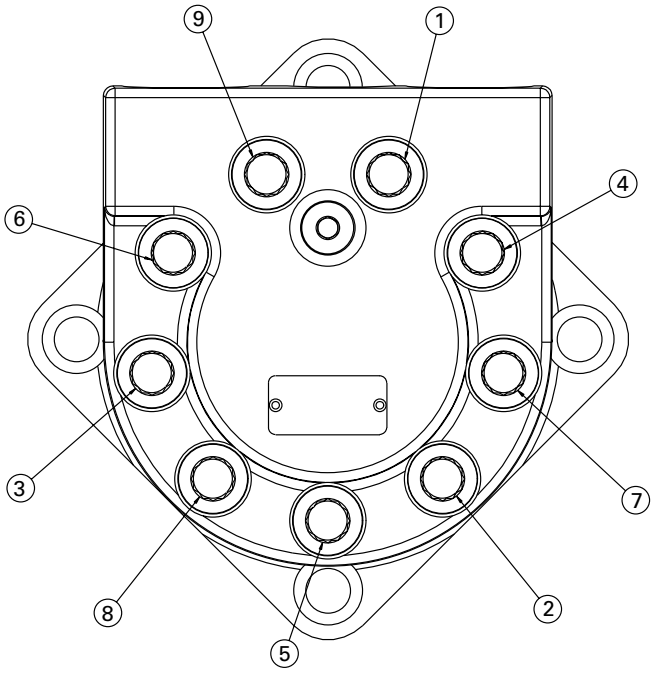

Figure 5

VIS Bearingless Motors - 30 Series

How to Order Replacement Parts

Each order must include the following:

1. Product Number
2. Date Code
3. Part Name
4. Part Number
5. Quantity of Parts

For more detailed information, please contact:

Eaton's Hydraulics Operations
14615 Lone Oak Road
Eden Prairie, MN 55344

For specification and performance data, refer to catalog E-MOLO-MC001-E3.

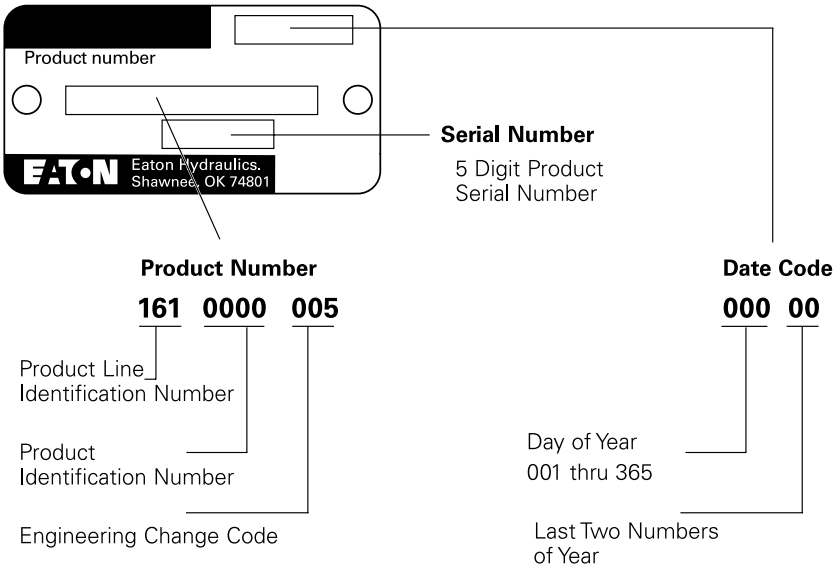

Eaton
Hydraulics Operations USA
14615 Lone Oak Road
Eden Prairie, MN 55344
USA
Tel: 952-937-9800
Fax: 952-294-7722
www.hydraulics.eaton.com

Eaton
Hydraulics Operations Europe
Route de la Longeraie 7
1110 Morges
Switzerland
Tel: +41 (0) 21 811 4600
Fax: +41 (0) 21 811 4601

Eaton
Hydraulic Operations Asia Pacific
11th Floor Hong Kong New World Tower
300 Huaihai Zhong Road
Shanghai 200021
China
Tel: 86-21-6387-9988
Fax: 86-21-6335-3912

EATON | Char-Lynn

© 2008 Eaton Corporation
All Rights Reserved

Printed in USA
Document No. C-MOLO-TM003-E
March 2008