EATON | Char-Lynn

VIS Bearingless Motors
45 Series

Parts and Repair Information

-005

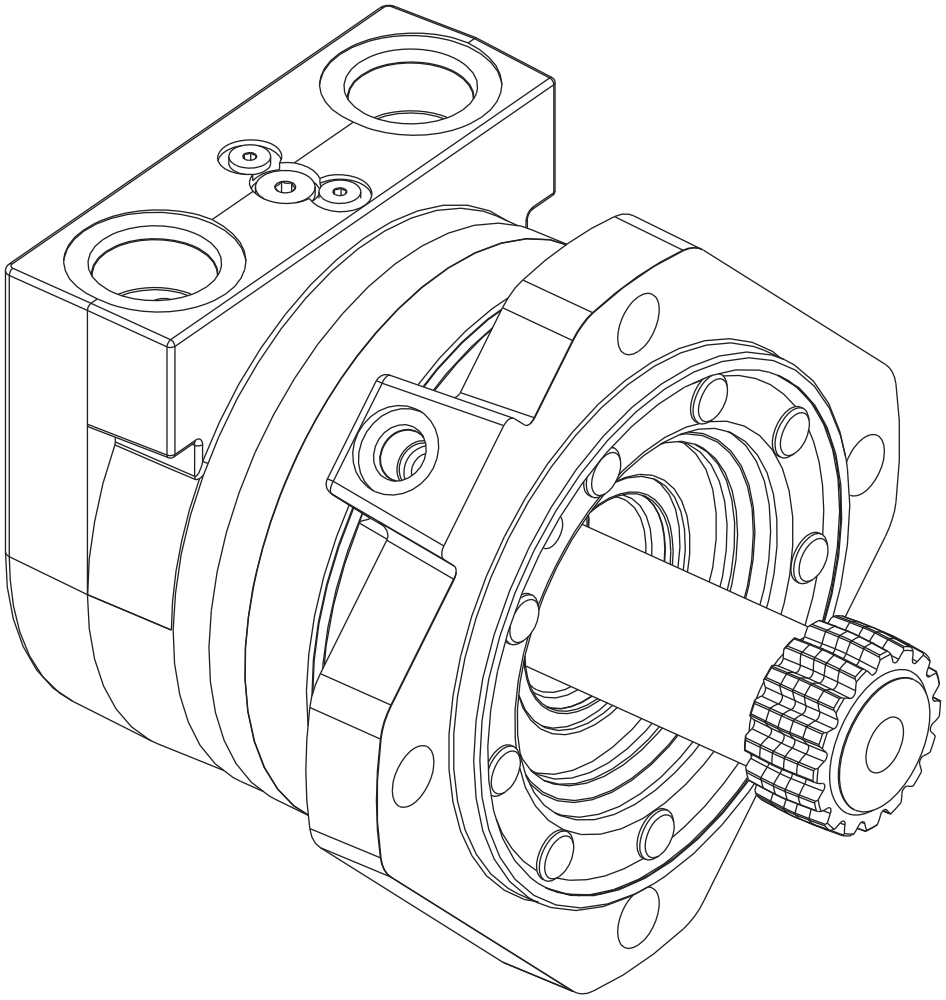

VIS Bearingless Motors - 45 Series

Parts

Table of Contents

Exploded View 2
Parts List for Bearingless Motor 3
Disassembly 4
Reassembly 5
How to Order Replacement Parts 7

Exploded View

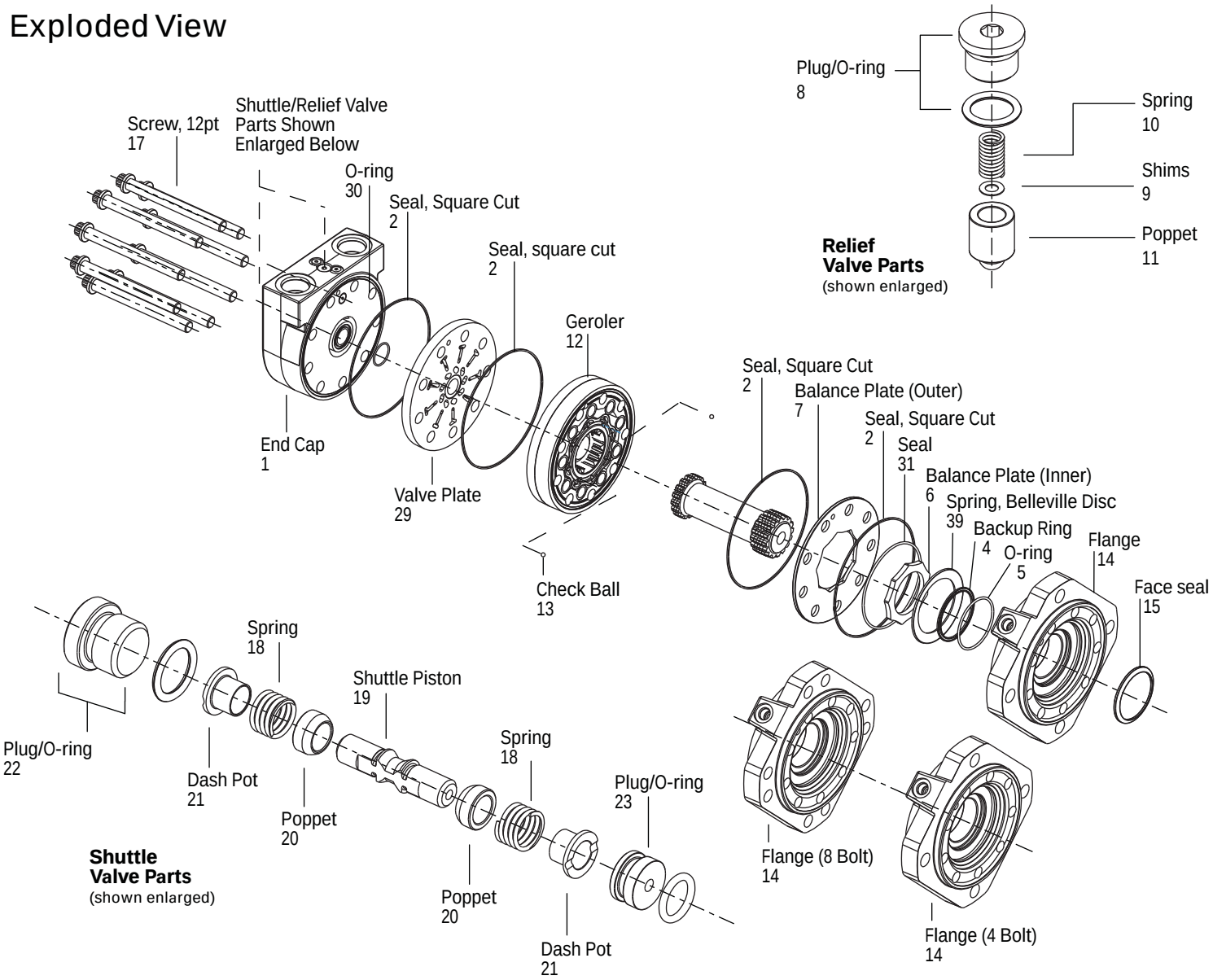

VIS Bearingless Motors - 45 Series

Parts List

	Ref. No.	Part No.	Description	Quantity
	1	5986560-001	End Cap Assembly 1-5/16-12 O-Ring Ports (2)	1
		5986560-008	End Cap Assembly G1(BSP) O-Ring Ports (2)	1
X	2	14559-007	Seal, Square Cut	4
X	4	14846-001	Ring, Back -up	1
X	5	14502-144	O-ring	1
	6	202943-001	Plate, Balance (Inner)	1
	7	5986548-001	Plate, Balance (Outer)	1
	8	9072-004	Plug, Sub Assembly	1
X		250003-905	O-ring	1
	9	16048-500	Shim (for relief valve only)	A/R
	10	17024-024	Spring (for relief valve only)	1
	11	113538-001	Poppet (for relief valve only)	1
	12	*	Geroler®	1
	13	285020-060	Ball	2
	14	202937-001	Flange, Mounting (4 Bolt)	1
		202937-004	Flange, Mounting (8 Bolt)	1
X	15	6992-000	Seal, Face	1
	16	*	Drive	1
	17	*	Screw, 12 PT	9
	18	230079-000	Spring	2
	19	201494-002	Piston, Shuttle	1
	20	8567-000	Poppet	2
	21	112126-001	Sleeve, Dash Pot	2
	22	9266-006	Plug, Sub Assembly	1
X		250003-906	O-ring	1
	23	201868-001	Plug, Sub Assembly	1
X		14502-012	O-ring	1
	29	5986547-001	Plate, Valve	1
X	30	14502-023	O-ring	1
X	31	14502-156	Seal	1
	39	203196-001	Spring, Belleville Disc	1
		9900203-000	Seal Kit – Contains Parts Indicated by X	

* See Chart Below A/R - As Required

DISPLACEMENT	REF NO. 12 GEROLER®	WIDTH	REF. NO. 16 DRIVE	LENGTH	REF. NO. 17 CAP SCREW	LENGTH
cm^3/r [in^3/r]		**mm [in.]**		**mm [in.]**		**mm [in.]**
520 [31.7]	5986550-002	33,3 [1.31]	201361-002	149,6 [5.89]	113388-575	146,1 [5.75]
572 [34.9]	5986550-003	36,6 [1.44]	201361-003	152,9 [6.02]	113388-575	146,1 [5.75]
630 [38.6]	5986550-004	40,6 [1.60]	201361-004	157,0 [6.18]	113388-600	152,4 [6.00]
720 [43.9]	5986550-010	46,0 [1.81]	201361-010	162,3 [6.39]	113388-625	158,8 [6.25]
805 [48.6]	5986550-005	50,8 [2.00]	201361-005	167,6 [6.60]	113388-625	158,8 [6.25]
990 [60.5]	5986550-006	63,2 [2.49]	201361-006	179,6 [7.07]	113388-675	171,5 [6.75]
1245 [76.0]	5986550-007	79,5 [3.13]	201361-007	195,8 [7.71]	113388-750	190,5 [7.50]
1560 [95.0]	5986550-008	99,3 [3.91]	201361-008	215,6 [8.49]	113388-825	209,6 [8.25]

VIS Bearingless Motors - 45 Series

Disassembly

Tools Required

– 1/4 inch Hex Key

– 3/16 inch Hex Key

– 5/8 inch Hex Key (End Ported Motor Only)

– Torque wrench - 200 Nm [150 lb-ft] capacity

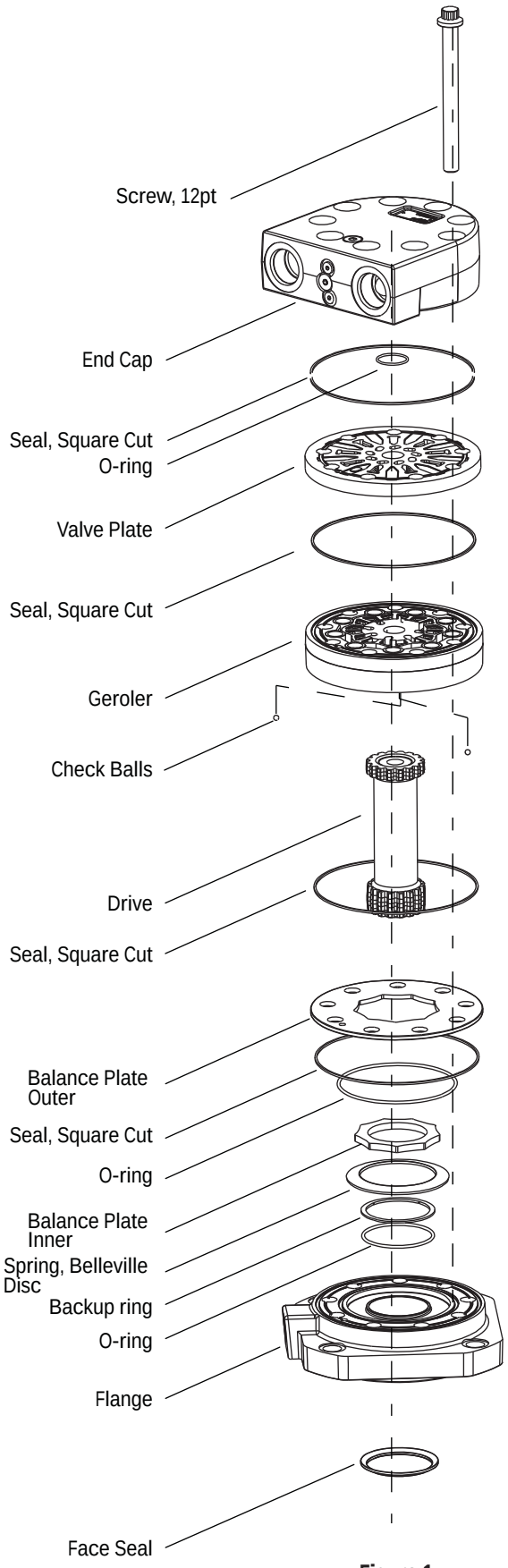

Figure 1

Disassembly

1. Cleanliness is extremely important when repairing hydraulic motors. Work in a clean area. Before disconnecting the hydraulic motor thoroughly clean the exterior. Remove motor from application and drain the oil from the motor before disassembly.
2. Remove the 9 cap screws and disassemble the motor in the vertical position as shown in Figure 1.
   Note placement of small ball checks in Geroler.
3. Remove shuttle valve (and relief valve if applicable) from end cap.
4. Remove two plugs from end cap (end ported motors only).
5. Check all mating surfaces. To reduce the chance of leakage, replace any parts that have scratches or burrs. Wash all metal parts in clean solvent. Blow them dry with pressurized air. Do not wipe parts dry with paper towels or cloth as lint in a hydraulic system will cause damage.

Reassembly

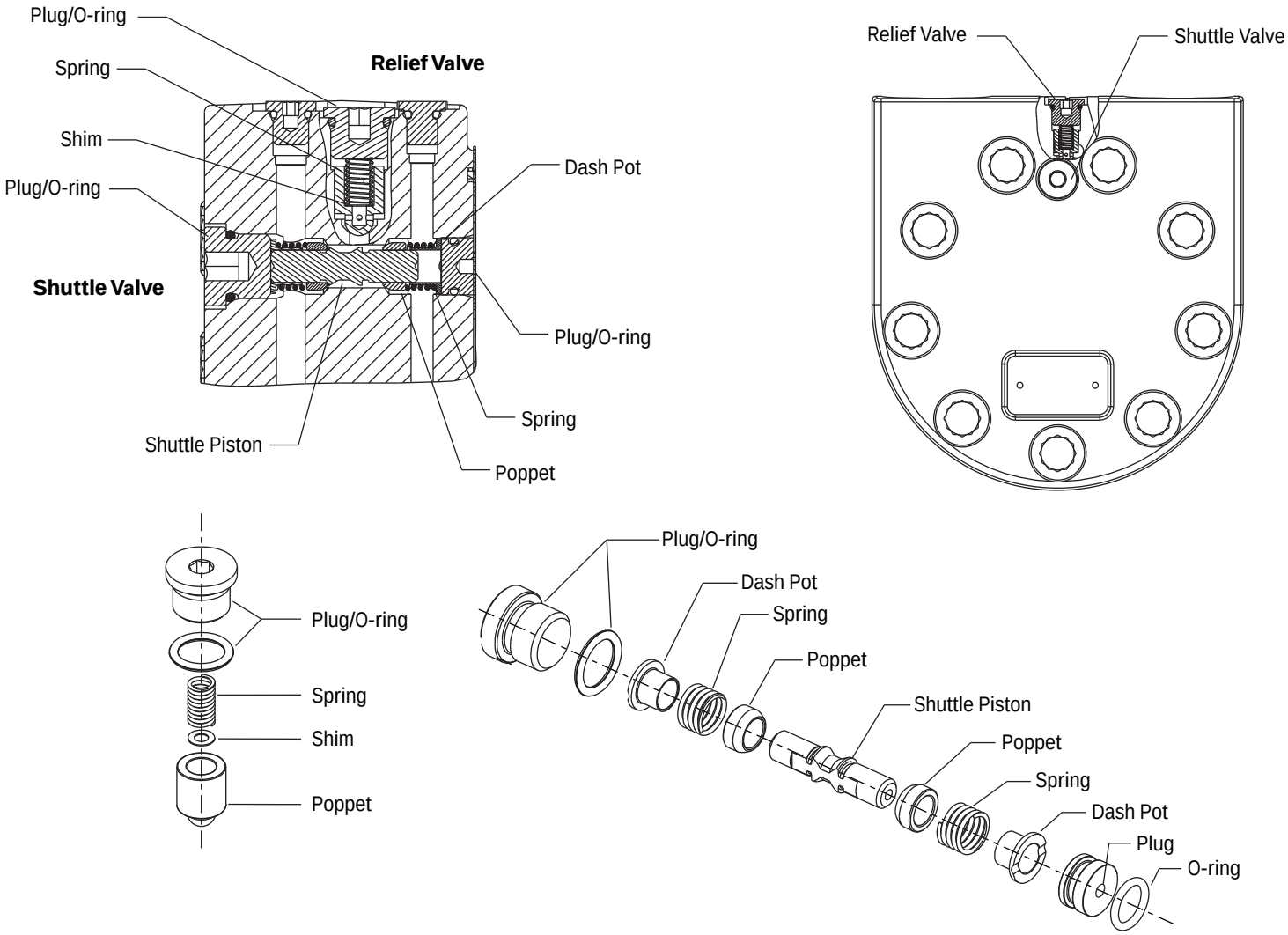

Figure 2

Reassembly

Note: Always use new seals when reassembling hydraulic motors. Refer to parts list for seal kit number and replacement parts.

Important: During reassembly, lubricate the new seals with a petroleum jelly such as Vaseline®. Also lubricate machined surfaces with clean hydraulic fluid.

6. Install one poppet, spring and dash pot into shuttle valve bore from valve plate side of end cap.

7. Install non-threaded plug with o-ring into end cap shuttle valve bore. O-ring and plug are to be lightly coated with petroleum jelly to ease assembly and plug should be inserted flush with end cap mounting surface.

8. Install shuttle piston from opposite end of shuttle valve cavity.

9. Install one shuttle valve poppet, spring and dash pot onto piston.

10. Install one shuttle valve threaded internal hex plug with o-ring. Shuttle plug threads may have light coat of oil or preservative. Torque plug to 37-45 Nm [324-396 lb-in].

11. For a motor with low pressure relief valve, install poppet, shims, spring and plug. Plug threads may have light coat of oil or preservative. Torque plug to 18-22 Nm [162-198 lb-in].

12. For a motor without low pressure relief valve, install plug with o-ring and torque plug to 18-22 Nm [162-198 lb-in].

VIS Bearingless Motors - 45 Series

Reassembly

Flange Assembly

13. Position flange on work bench with the o-ring grooves face down and install face seal (72,9 [2.87] OD).

14. With mounting flange o-rings grooves up, install two o-ring seals (150,8 [5.94] ID & 107,7 [4.24] ID) into flange. Install back up-up ring (69,5 [2.74] OD) over o-ring (63,2 [2.49] ID) with flat side up (See Figure 3). Back-up ring and o-rings may be greased to assist in retaining parts.

Final Assembly

15. Place drive into build fixture. Place mounting flange (seal grooves up) over drive.

16. Place Belleville spring (concave side down) in groove in mounting flange.

17. Place outer and inner balance plates on mounting flange. Align shuttle flow cavity of outer balance plate with shuttle flow cavity of mounting flange.

18. Install two steel balls into seats of star (one per seat). Retain balls with grease.

19. Install o-ring seals (150,8 [5.94] ID) in o-ring grooves on both sides of Geroler. Seal on balance ring side of Geroler must have sufficient coating of petroleum jelly to assist in retaining seal in the groove. Place Geroler assembly over outer balance plate. Make sure that balls are in their seats. Align shuttle flow cavity of Geroler with shuttle flow cavity of outer balance plate.

20. Place valve plate onto Geroler. Align bolt holes and shuttle flow hole with mating holes on Geroler.

21. Place end cap on workbench name plate side down, seal grooves face up. Install o-rings (150,8 [5.94] ID & 26,7 [1.05] ID) into seal grooves. Seals must have sufficient coating of petroleum jelly to assist in retaining seal in the groove.

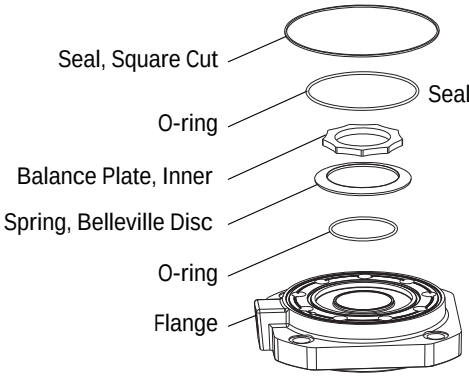

Figure 3

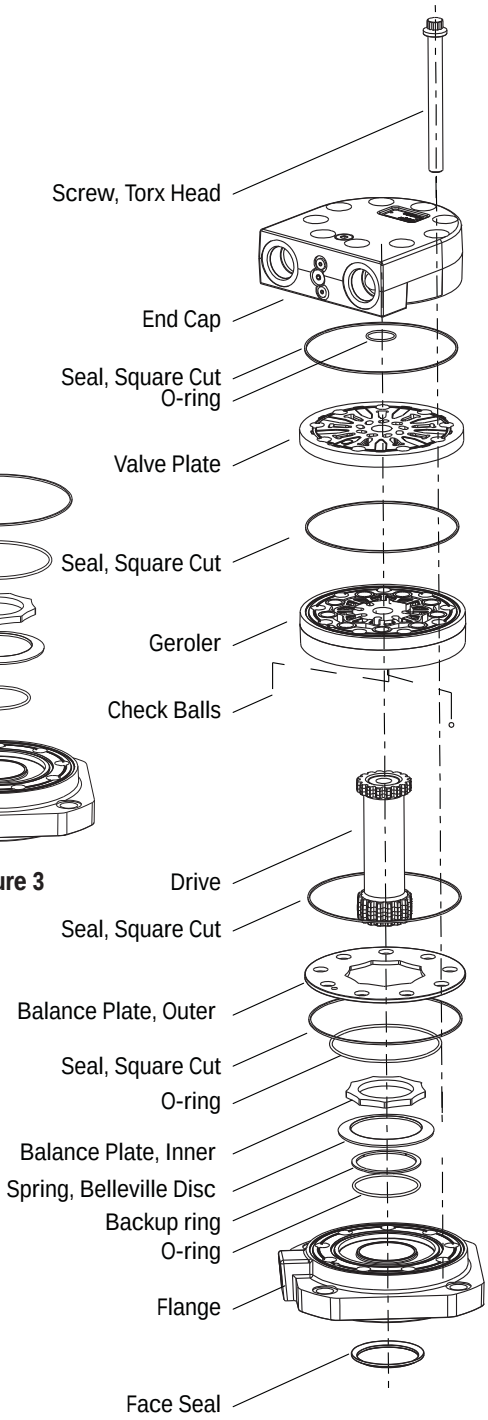

Figure 4

22. Carefully invert end cap and place onto valve plate. Make sure that shuttle flow cavities are aligned.

23. Install nine cap screws lubricated with DTE-26/DTE-24. Pre-torque each in a crisscross pattern to 80±10 lb-ft. Finally, in a crisscross pattern, tighten screws to 135±5 lb-ft].

Note: Damage to the balance plate will occur if these bearingless motors are lifted by the drive.

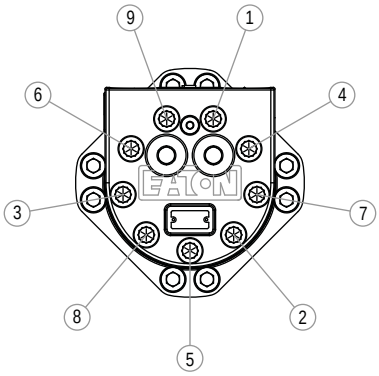

Figure 5

VIS Geroler Motors - 45 Series

How to Order Replacement Parts

Each order must include the following.

1. Product Number
2. Date Code
3. Part Name
4. Part Number
5. Quantity of Parts

For more detailed information, please contact

Eaton's Hydraulics Operations
14615 Lone Oak Road
Eden Prairie, MN 55344

For specifications and performance data, refer to catalog E-MOLO-MC001-E3

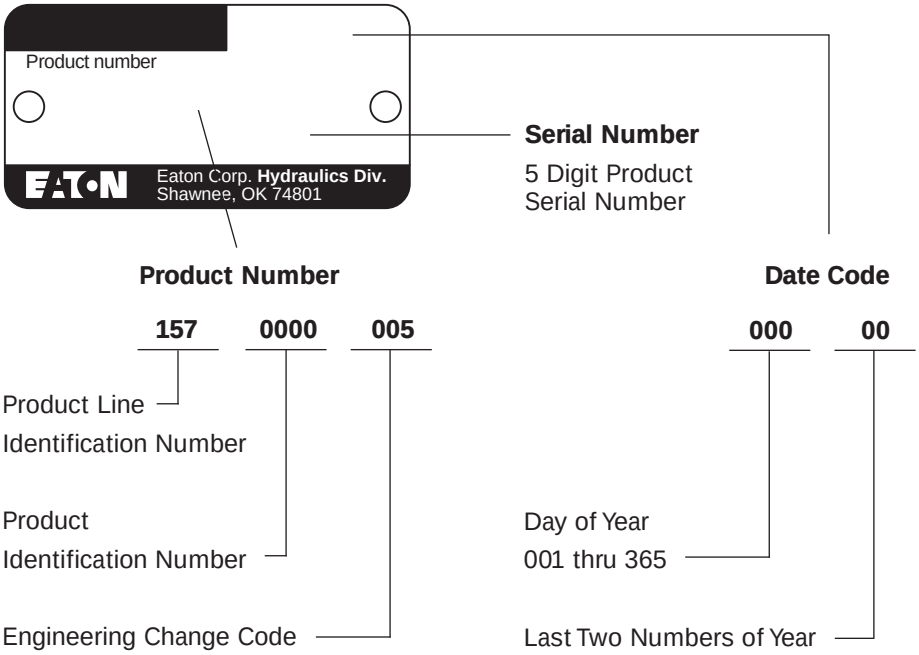

Eaton
Hydraulics Operations USA
14615 Lone Oak Road
Eden Prairie, MN 55344
USA
Tel: 952-937-9800
Fax: 952-294-7722
www.hydraulics.eaton.com

Eaton
Hydraulics Operations Europe
Route de la Longeraie 7
1110 Morges
Switzerland
Tel: +41 (0) 21 811 4600
Fax: +41 (0) 21 811 4601

Eaton
Hydraulics Operations Asia Pacific
11th Floor Hong Kong New World Tower
300 Huaihai Zhong Road
Shanghai 200021
China
Tel: 86-21-6387-9988
Fax: 86-21-6335-3912

Char-Lynn

© 2008 Eaton Corporation
All Rights Reserved

Printed in USA
Document No. C-MOLO-TMOO6-E
March 2008