Eaton®
Hydraulic Motor

April, 1996

Parts Information

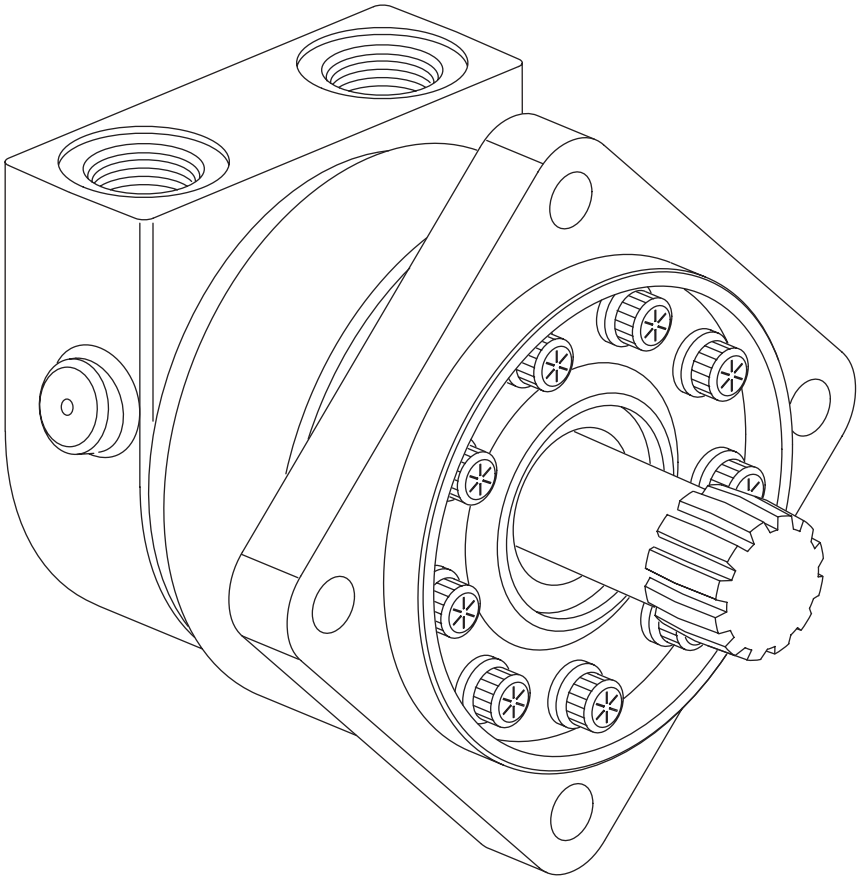

30 Series
VIS Bearingless Motor

002

30 Series Parts Dwg

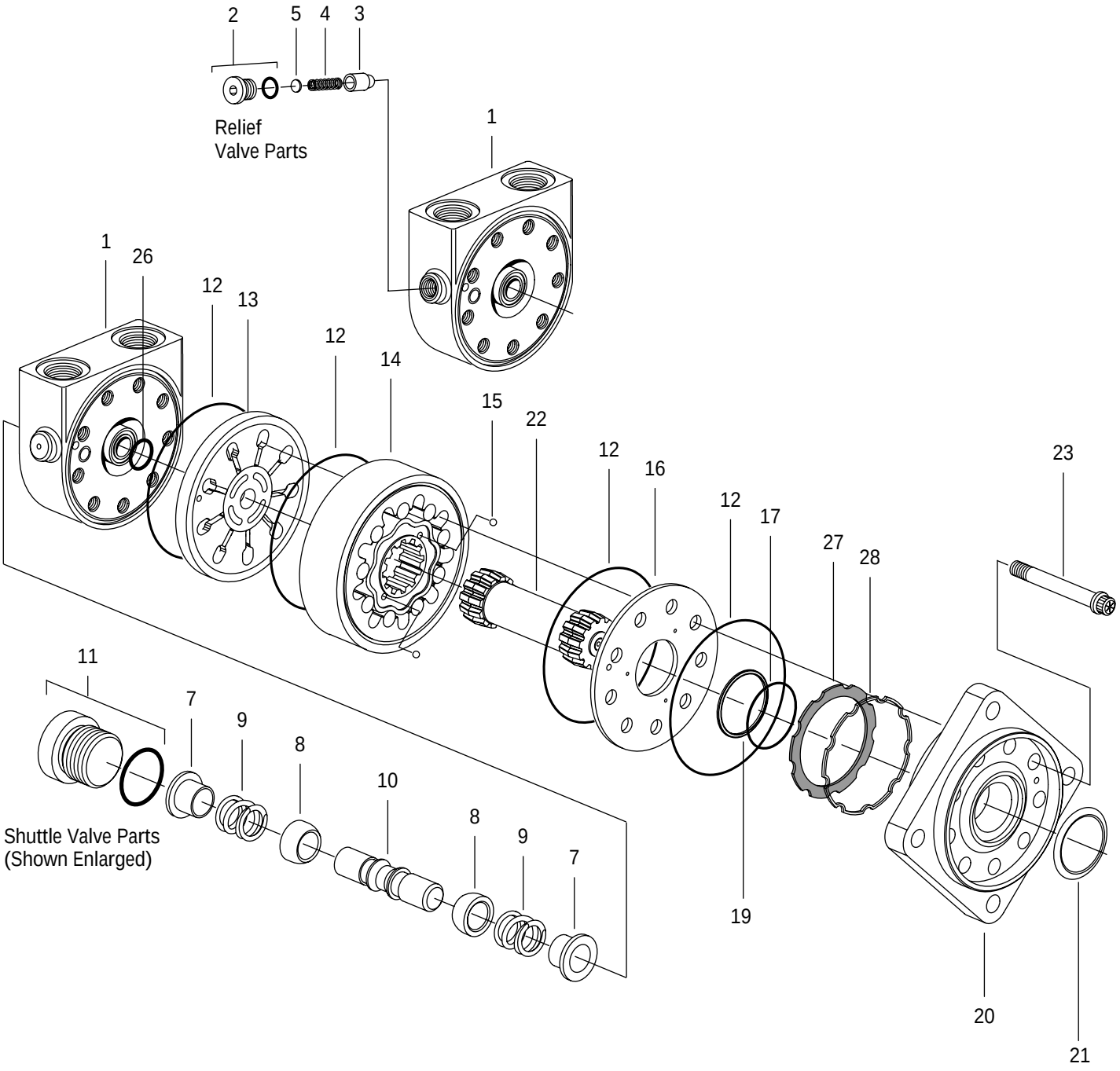

30 Series Parts List

Ref. No.	Part No.	Description	Quantity
1	201519-000	End Cap Assembly 1-5/16-12 O-ring Ports (2)	1
	201737-001	End Cap Assembly 1-5/16-12 O-ring Ports (2) w/Relief Valve Bore	1
2	9072-004	Plug/O-ring (for relief valve unit only)	1
X	250003-905	O-ring	1
3	201495-004	Poppet (for relief valve unit only)	1
4	17024-026	Spring (for relief valve unit only)	1
5	16048-500	Shim (for relief valve unit only)	A/R
7	8755-000	Sleeve, Dash Pot	2
8	8567-000	Poppet	2
9	230079-000	Spring	2
10	201494-001	Piston, Shuttle	1
11	9266-006	Plug/O-ring Sub Assembly	1
X	250003-906	O-ring	1
X 12	9022-014	Seal	4
13	201946-001	Plate, Valve	1
14	*	Geroler®	1
15	285020-060	Ball	2
16	201273-001	Plate, Balance	1
X 17	250002-032	O-ring	1
X 19	14693-001	Ring, Back-up	1
20	201520-001	Flange, Mounting — 9/16-18 O-ring Case Drain Port	1
X 21	9080-001	Seal, Face	1
22	*	Drive	1
23	*	Screw, Cap	9
X 26	250183-002	O-ring	1
X 27	14720-002	Seal (for relief valve unit only)	1
X 28	14713-002	Ring, Back-up	1
	61295-000	Seal Kit — Contains Parts Indicated by X	

* See Chart Below A/R — As Required

Displacement cm^3/r [in^3/r]	Ref. No. 14 Geroler®	Width mm [inch]	Ref. No. 22 Drive	Length mm [inch]	Item Ref. No. 23 Screw, Cap Internal Hex	Length mm [inch]
246 [15.0]	—	—	—	—	—	—
323 [19.7]	—	—	—	—	—	—
395 [24.1]	201280-005	38,6 [1.52]	201901-005	123,1 [4.85]	16317-400	101,6 [4.00]
492 [30.0]	—	—	—	—	—	—
623 [38.0]	—	—	—	—	—	—

30 Series Parts Dwg

How to Order Replacement Parts

Each Order Must Include the Following:

1. Product Number
2. Date Code
3. Part Name
4. Part Number
5. Quantity of Parts

For More Detailed Information Contact Eaton Corp. Hydraulics Division 15151 Highway 5 Eden Prairie, MN 55344.

- Specifications and Performance Data, Catalog No. 11-112.
- When servicing 30 Series Motors refer to Repair Information No. 7-150. This repair manual lists tools required, and step by step disassembly and reassembly procedures.

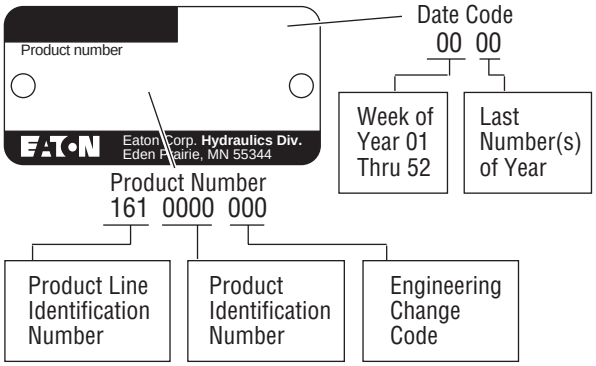

Eaton
Fluid Power Group
Hydraulics Business USA
14615 Lone Oak Road
Eden Prairie, MN 55344
USA
Tel: 952-937-9800
Fax: 952-294-7722
www.eaton.com/hydraulics

Eaton
Fluid Power Group
Hydraulics Business Europe
Route de la Longeraie 7
1110 Morges
Switzerland
Tel: +41 (0) 21 811 4600
Fax: +41 (0) 21 811 4601

Eaton
Fluid Power Group
Hydraulics Business Asia Pacific
11th Floor Hong Kong New World Tower
300 Huaihai Zhong Road
Shanghai 200021
China
Tel: 86-21-6387-9988
Fax: 86-21-6335-3912

Powering Business Worldwide

© 2008 Eaton Corporation
All Rights Reserved
Printed in USA
Document No. E-MOLO-TP002-E
Supersedes 06-152
November 2008