Eaton®
Hydraulic Motor

August, 1999

Repair Information

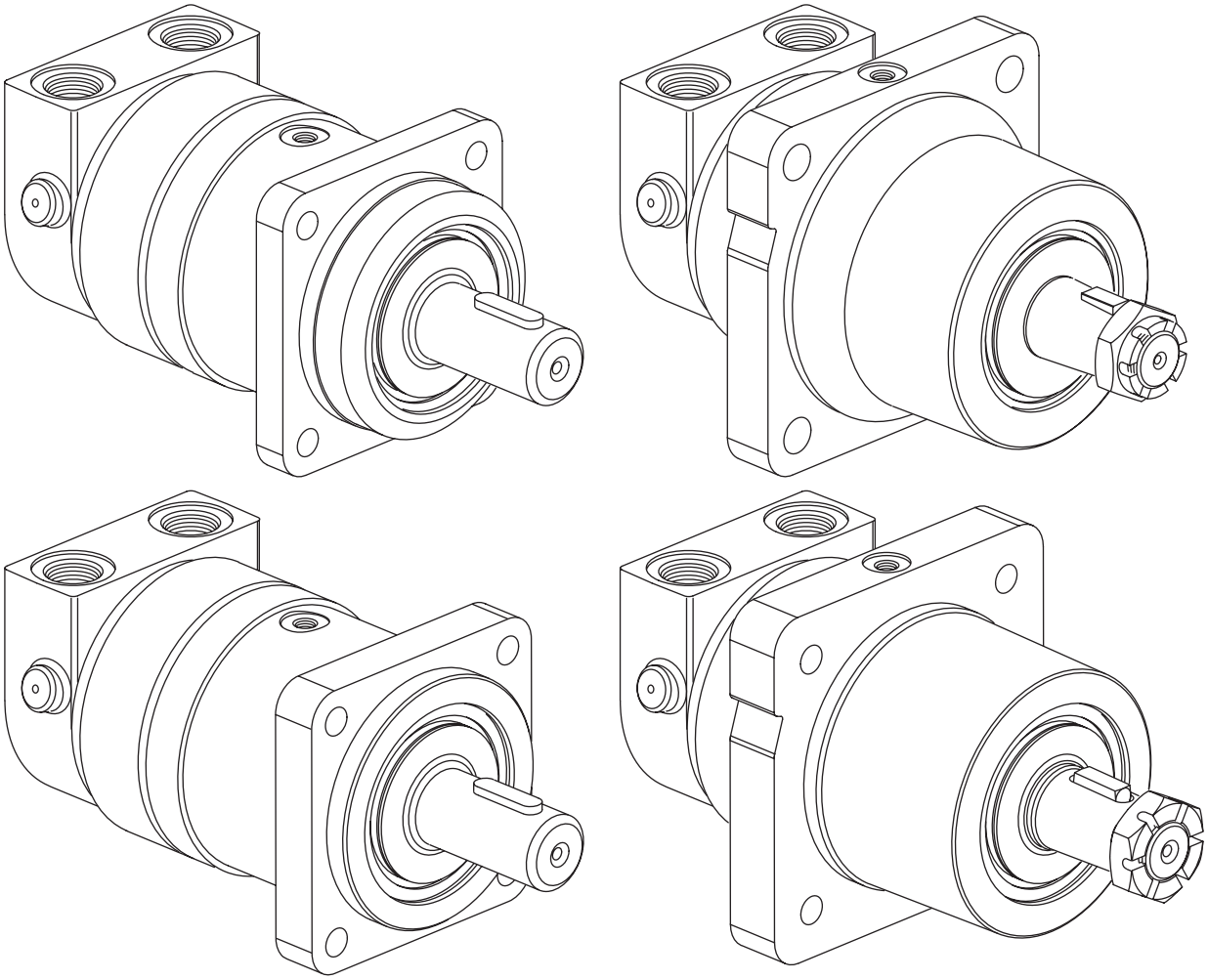

Series VIS 30
Standard and Wheel Motors (SAE and ISO)

002

Parts Drawing
(motor end)

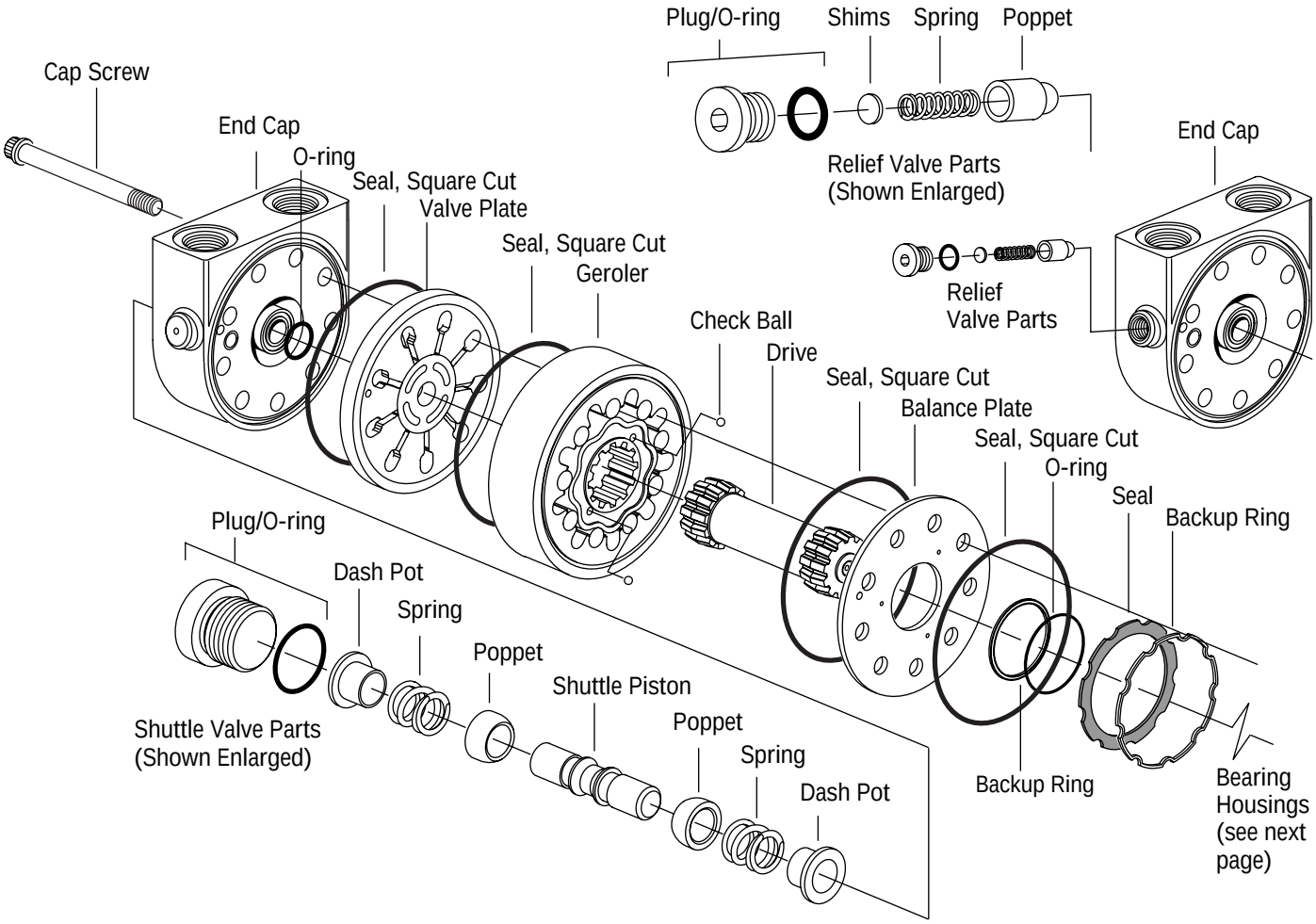

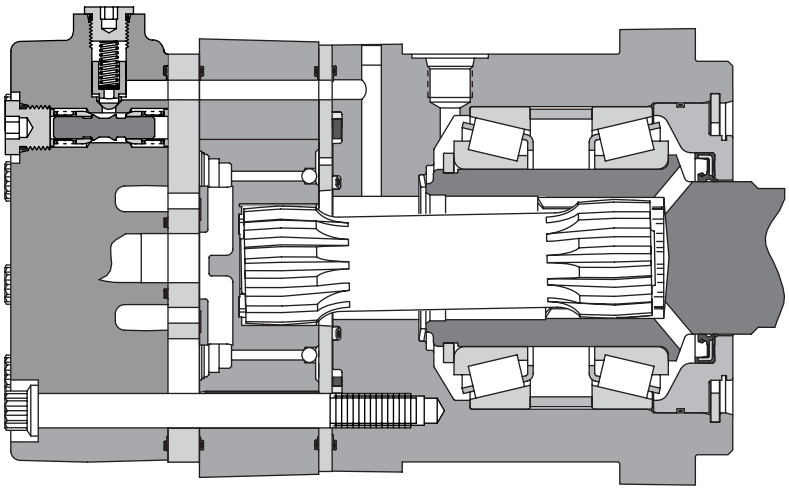

Parts Drawing
(shaft/bearing end)

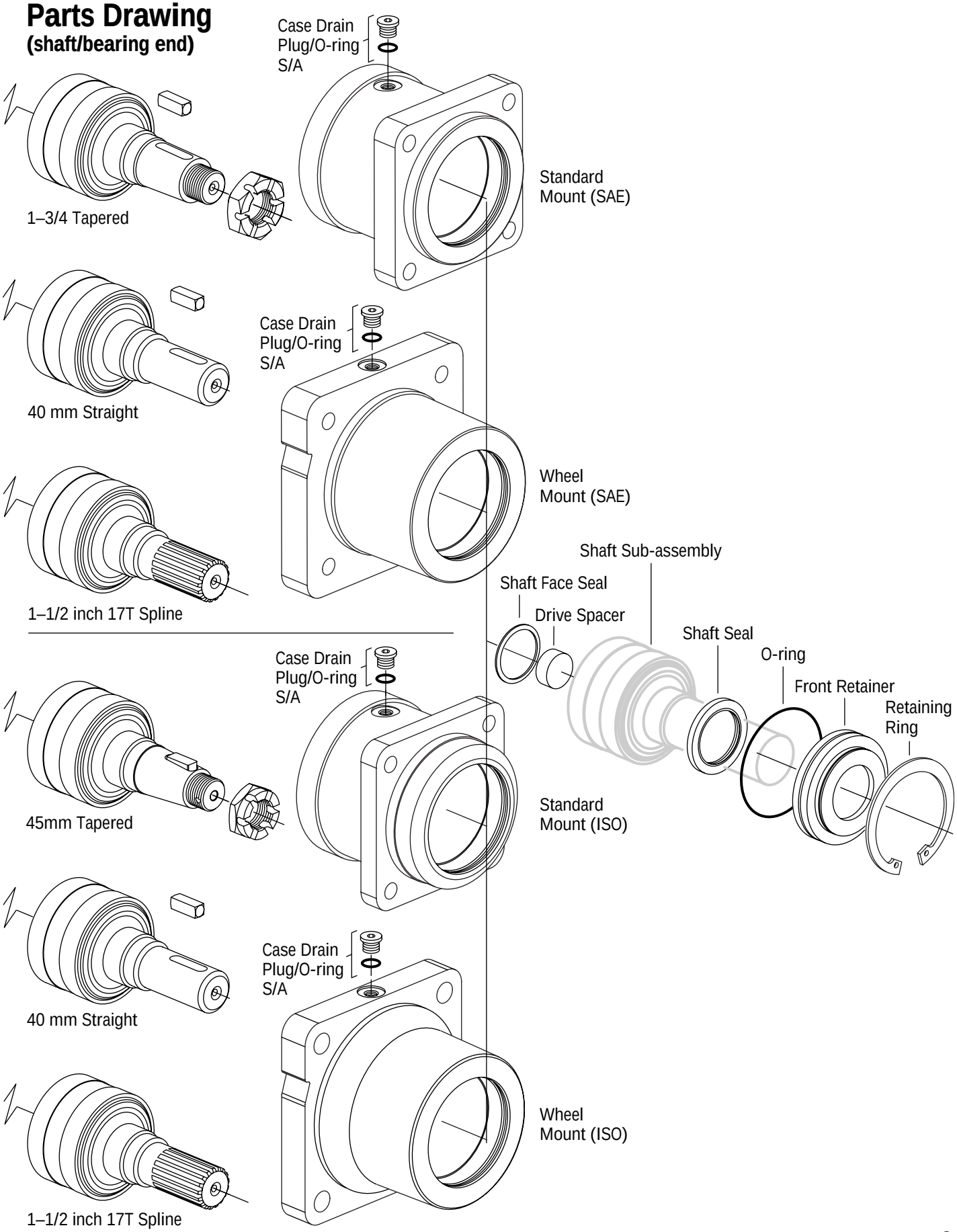

Disassembly
(motor end)

Tools Required

- 1/4 inch Hex Key (relief valve plug)
- 3/16 inch Hex Key (shuttle valve plug)
- 3/8 inch Hex Key (socket head cap screws (7) used on some motors)
- 7/16 Socket (12 point drive)
- Torque wrench - 45 Nm [400 lb-in] capacity
- Shaft Face Seal Installation Tool No. 606138-000
- Shaft Seal Installation Tool No. 606175-000
- Shaft Bullet Tool No. 606161-000

Disassembly

1 Cleanliness is extremely important when repairing hydraulic motors. Work in a clean area. Before disconnecting the hydraulic motor thoroughly clean the exterior. Remove motor from application and drain the oil from the motor before disassembly.

2 Remove the 9 cap screws and disassemble the motor in the vertical position as shown in Figures 1 and 2. **Note placement of small ball checks in Geroler.**

3 Remove shuttle valve (and relief valve if applicable) from end cap (not shown in figure 1 – see figure 2).

4 Check all mating surfaces. To reduce the chance of leakage, replace any parts that have scratches or burrs. Wash all metal parts in clean solvent. Blow them dry with pressurized air. Do not wipe parts dry with paper towels or cloth as lint in a hydraulic system will cause damage.

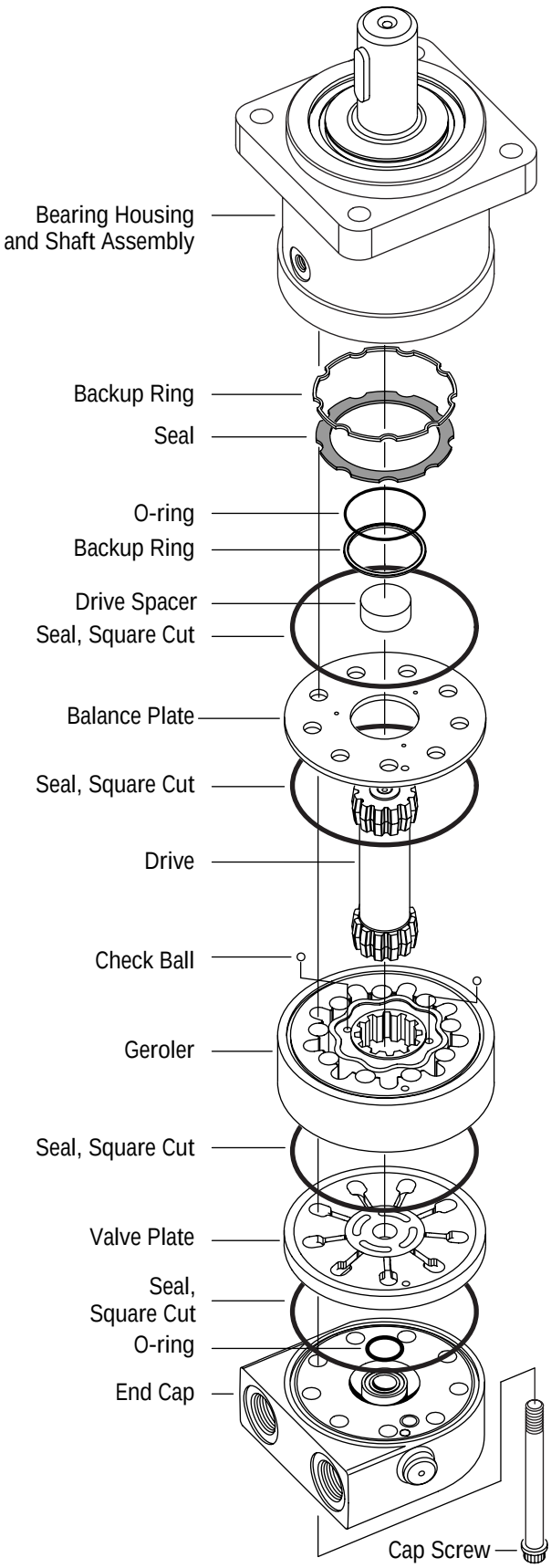

Figure 1

Reassembly (end cap)

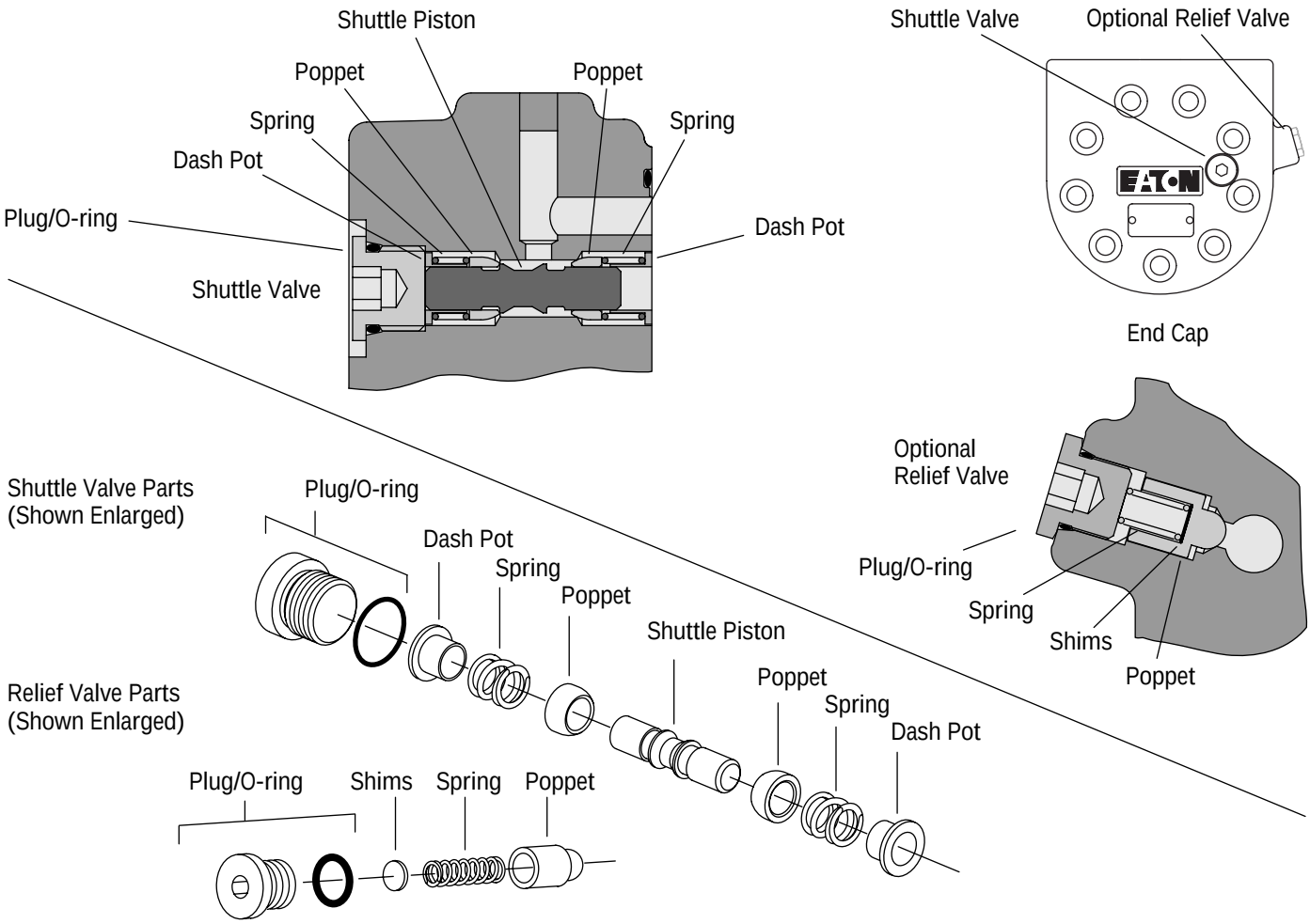

Figure 2

Reassembly

Note: Always use new seals when reassembling hydraulic motors. Refer to parts information (literature numbers shown below) for seal kit number, replacement parts, and ordering information.

Series VIS 30 (SAE) Parts Information No. 6-155
Series VIS 30 (ISO) Parts Information No. 6-167

Important: During reassembly, lubricate the new seals with a petroleum jelly such as Vaseline®. Also lubricate machined surfaces with clean hydraulic fluid.

5 Install one poppet, spring and dash pot into shuttle valve bore from valve plate side of end cap.

6 Install shuttle piston from opposite end of shuttle valve cavity.

7 Install one shuttle valve poppet, spring and dash pot onto piston.

8 Install one shuttle valve threaded internal hex plug with o-ring. Shuttle plug threads may have light coat of oil or preservative. Torque plug to 37-45 Nm [324-396 lb-in].

9 For a motor with low pressure relief valve, install poppet, shims, spring and plug. Plug threads may have light coat of oil or preservative. Torque plug to 23-29 Nm [207-253 lb-in].

Disassembly
(shaft/bearing end)

10 Disassemble bearing housing (4 bearing housings, and 6 shaft sub-assembly options are shown).

Note: Do NOT disassemble shaft sub-assembly.

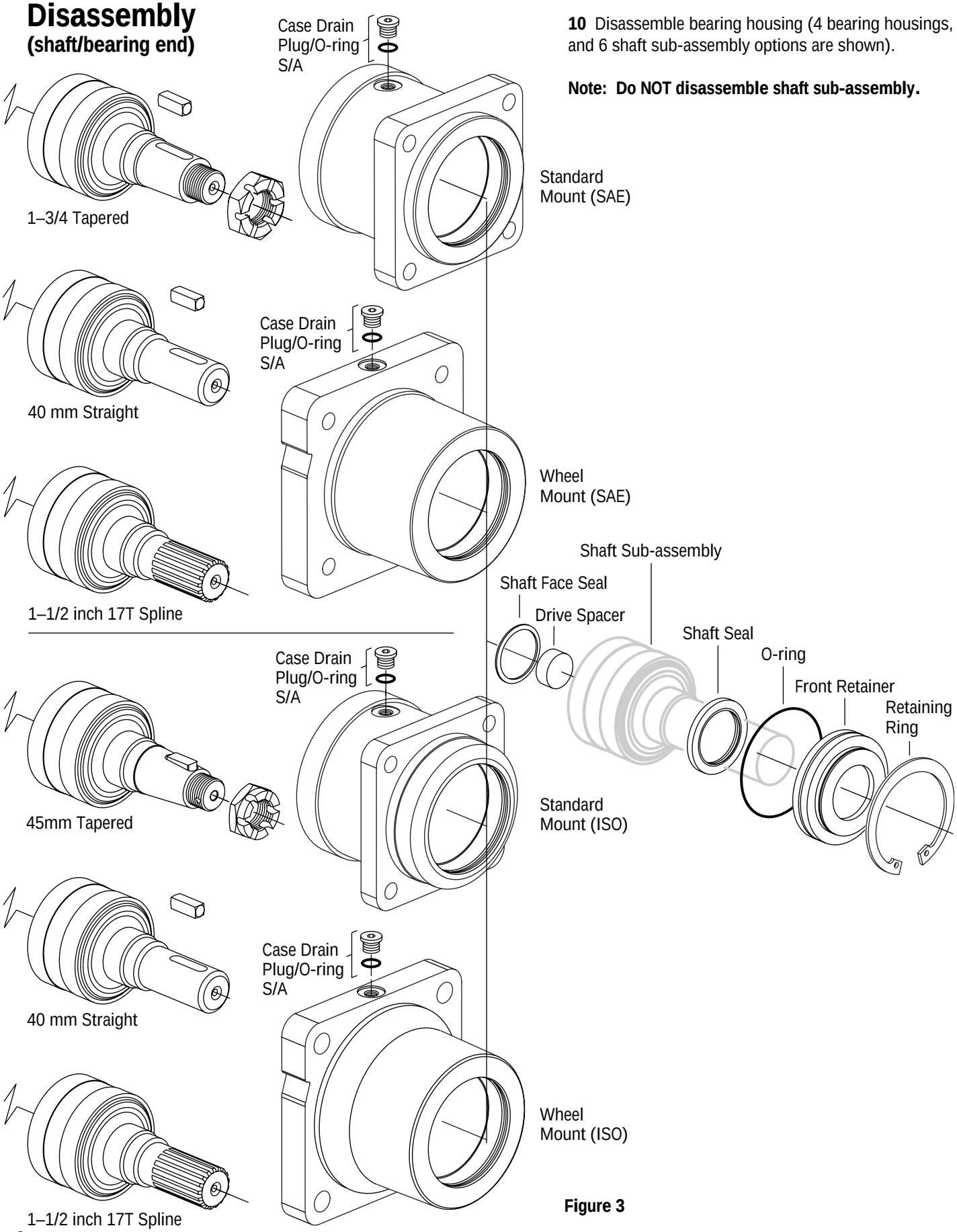

Figure 3

Reassembly (shaft/bearing end)

Note: Always use new seals when reassembling hydraulic motors. Refer to parts list (two listed below) for seal kit number, replacement parts, and ordering information.

Parts Information No. 6-155 Series VIS 30 (SAE)
Parts Information No. 6-167 Series VIS 30 (ISO)

Important: During reassembly, lubricate the new seals with a petroleum jelly such as Vaseline®. Also lubricate machined surfaces with clean hydraulic fluid.

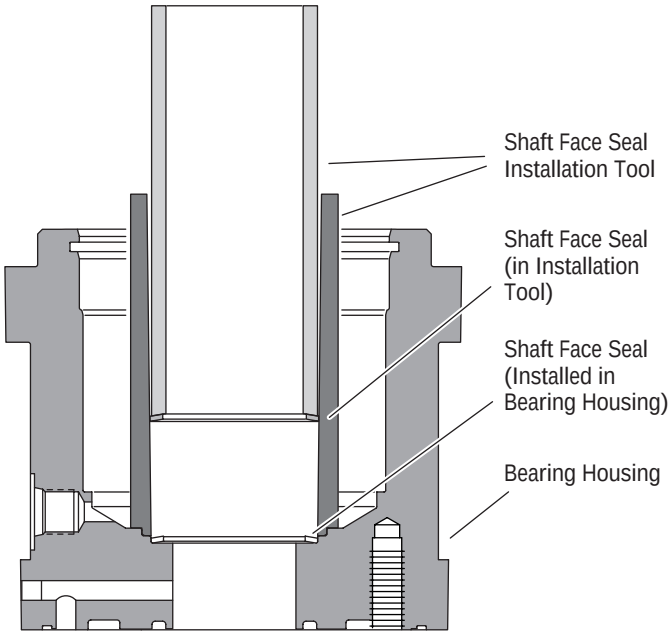

Figure 4

11 Install shaft face seal into bearing housing. Use an installation tool (No. 606138-000) as shown, lubricate seal with Mobil EP -2 grease or petroleum jelly (e.g. Vaseline) and compress seal into place.

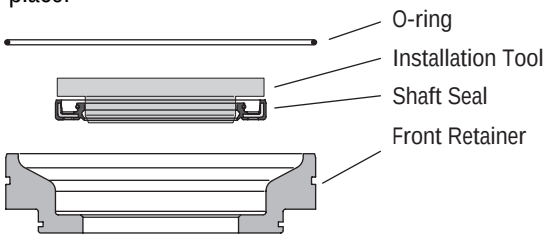

Figure 5

12 Lightly lubricate seal with Mobil EP -2 grease or petroleum jelly (e.g. Vaseline). Install in groove on front retainer.

13 Lightly lubricate seal lip of shaft pressure seal with Mobil EP-2 grease or petroleum jelly (e.g. Vaseline). Place seal on assembly tool No. 606175-000, and press into bore of front retainer. Press until seal makes positive stop with front retainer shoulder. Protect inside diameter shaft seal area from damage.

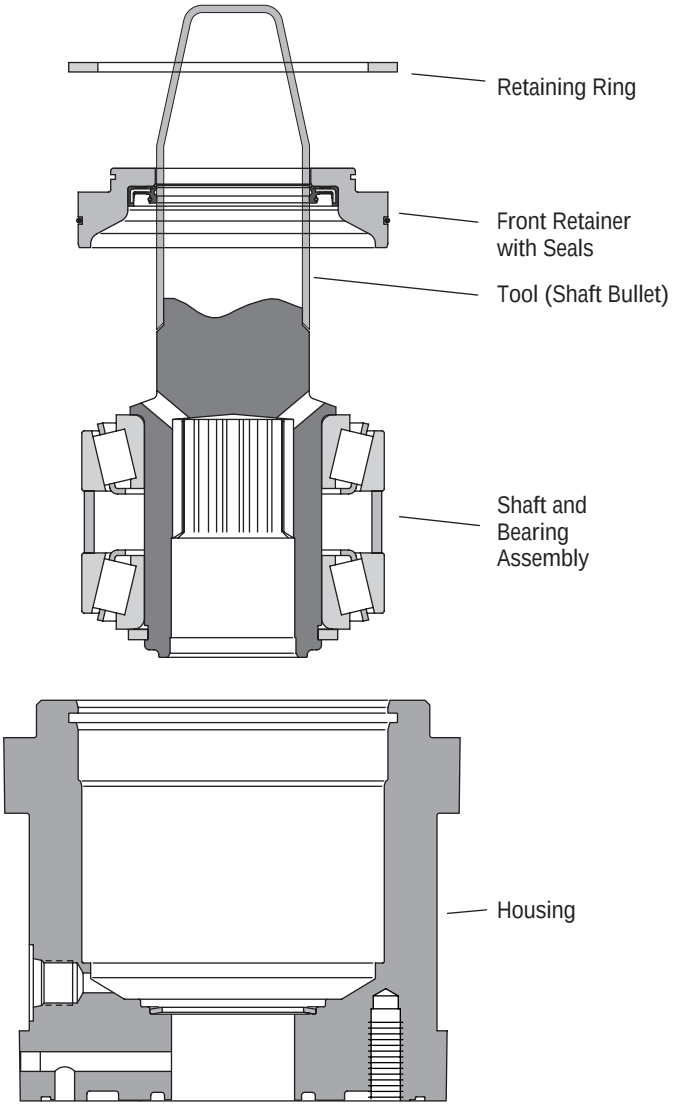

Figure 6

14 Install shaft and bearing assembly in bearing housing, you may need a press to install shaft and bearing assembly.

15 Before installing retainer, place a protective sleeve of bullet (see note below) over shaft. Grease inside diameter of shaft seal. To prevent damage to seal, install front retainer over shaft with a twisting motion. Do not cut or distort shaft seal. Damage to shaft seal will cause external leakage.

Note: Bullet No. 606161-000 for shafts available—by special order through our service department.

Reassembly
(motor end onto shaft/bearing end)

Final Assembly

Note: Seals and Check Balls must have a coating of petroleum jelly to assist in retaining these parts in an inverted position later on in final assembly.

16 Install one square cut seal (106,0 [4.17] ID) into large face groove of bearing housing.

17 Install seal (77,0 [3.03] ID) and back-up ring (94,1 [3.71] OD) into groove of bearing housing.

18 Install seal (47,3 [1.86] ID) and back-up ring (52,8 [2.08] OD) into small face groove of bearing housing.

19 Install drive spacer into output shaft spline.

20 Install main drive with longest spline length (if asymmetric) into output shaft spline.

21 Install balance plate onto bearing housing. Align shuttle flow cavity of balance plate with shuttle flow cavity of bearing housing.

22 Grease two square cut seals (106,0 [4.17] ID) and install into face grooves of Geroler.

23 Place two steel balls into seats of star (one per seat). Grease sufficiently to retain balls when Geroler is assembled.

24 Install Geroler by mating internal spline with external spline of drive. Align shuttle flow cavity of Geroler with shuttle flow cavity of balance plate.

25 Install valve plate on Geroler making sure to align necessary shuttle flow holes.

26 Grease one square cut seal (106,0 [4.17] ID) and install into groove of end cap.

27 Grease seal (21,0 [.83] ID) and install into small face groove of end cap.

28 Carefully invert end cap and install on valve plate. Refer to end cap reassembly (with Shuttle System — page 5).

29 Install nine (9) cap screws. Torque to 115-102 Nm [75-85 lb-ft] using crisscross pattern (see Figure 8).

Important: If bolts have been installed to specified torque between one and four times, 2-4 drops of loctite 262 can be used on tread of each bolt prior to installation. In this case, the loctite should be allowed to dry for one hour prior to test of the motor. If bolts have been installed to specified torque more than four times, coatings should be reapplied on bolts at vendor.

30 Install two (2) cap plugs in main ports (Optional).

31 Install key and hex nut if required.

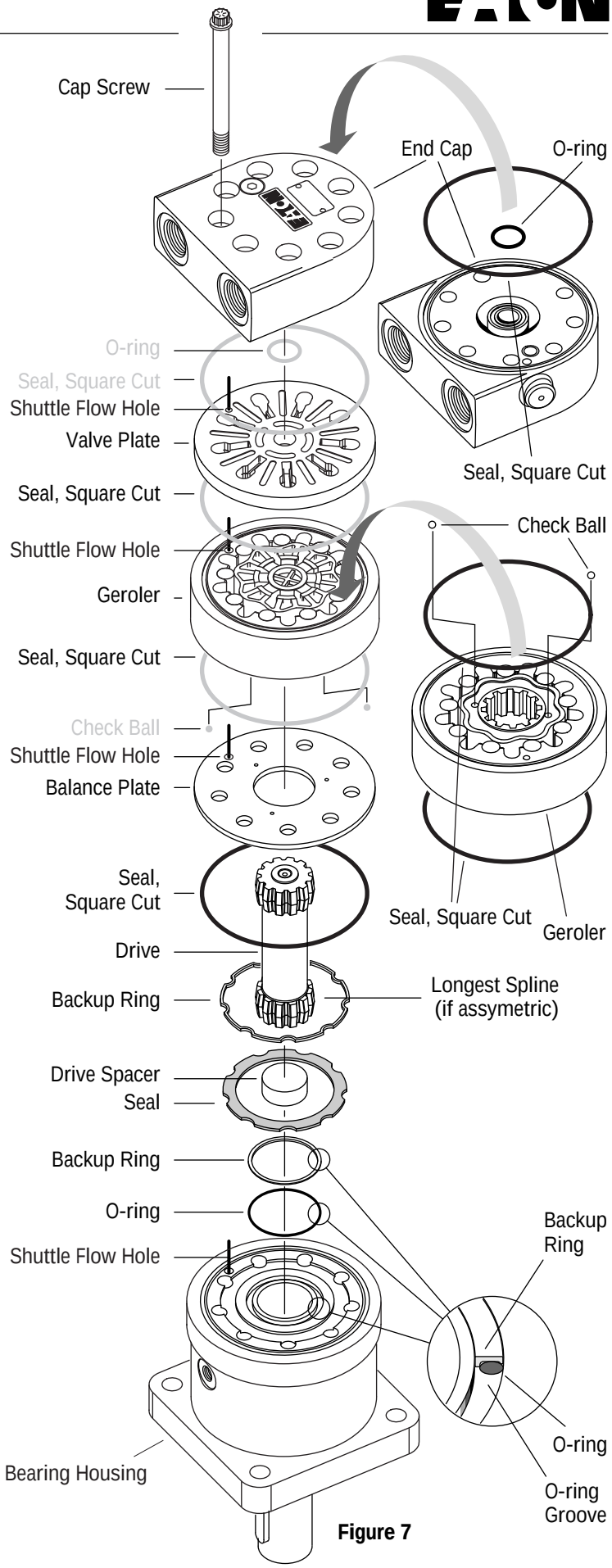

Figure 7

Torque Sequence

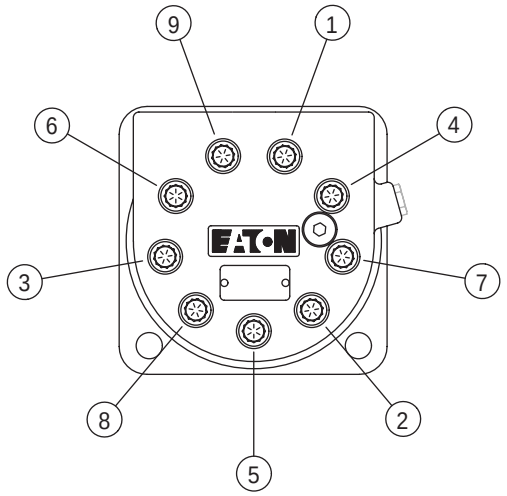

Figure 8

Notes:

Notes:

Series VIS 30 Geroler Motors

How to Order Replacement Parts

Each Order Must Include the Following:

1. Product Number
2. Date Code
3. Part Name
4. Part Number
5. Quantity of Parts

For more detailed information contact Eaton Corp. Hydraulics Division 15151 Highway 5 Eden Prairie, MN 55344.

- Specifications and performance data, Catalog No. 11-112
- Replacement part numbers and kit information —
  Series VIS 30 (SAE) Parts Information No. 6-155
  Series VIS 30 (ISO) Parts Information No. 6-167

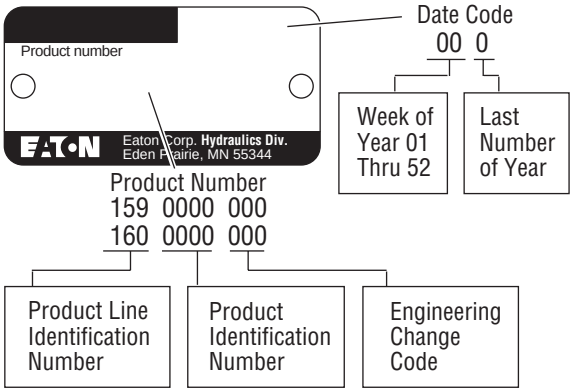

Eaton
Fluid Power Group
Hydraulics Business USA
14615 Lone Oak Road
Eden Prairie, MN 55344
USA
Tel: 952-937-9800
Fax: 952-294-7722
www.eaton.com/hydraulics

Eaton
Fluid Power Group
Hydraulics Business Europe
Route de la Longeraie 7
1110 Morges
Switzerland
Tel: +41 (0) 21 811 4600
Fax: +41 (0) 21 811 4601

Eaton
Fluid Power Group
Hydraulics Business Asia Pacific
11th Floor Hong Kong New World Tower
300 Huaihai Zhong Road
Shanghai 200021
China
Tel: 86-21-6387-9988
Fax: 86-21-6335-3912

Powering Business Worldwide

© 2008 Eaton Corporation
All Rights Reserved
Printed in USA
Document No. E-MOLO-TS007-E
Supersedes 07-153
December 2008