Eaton®
Hydraulic Motor

February, 1996

Parts Information

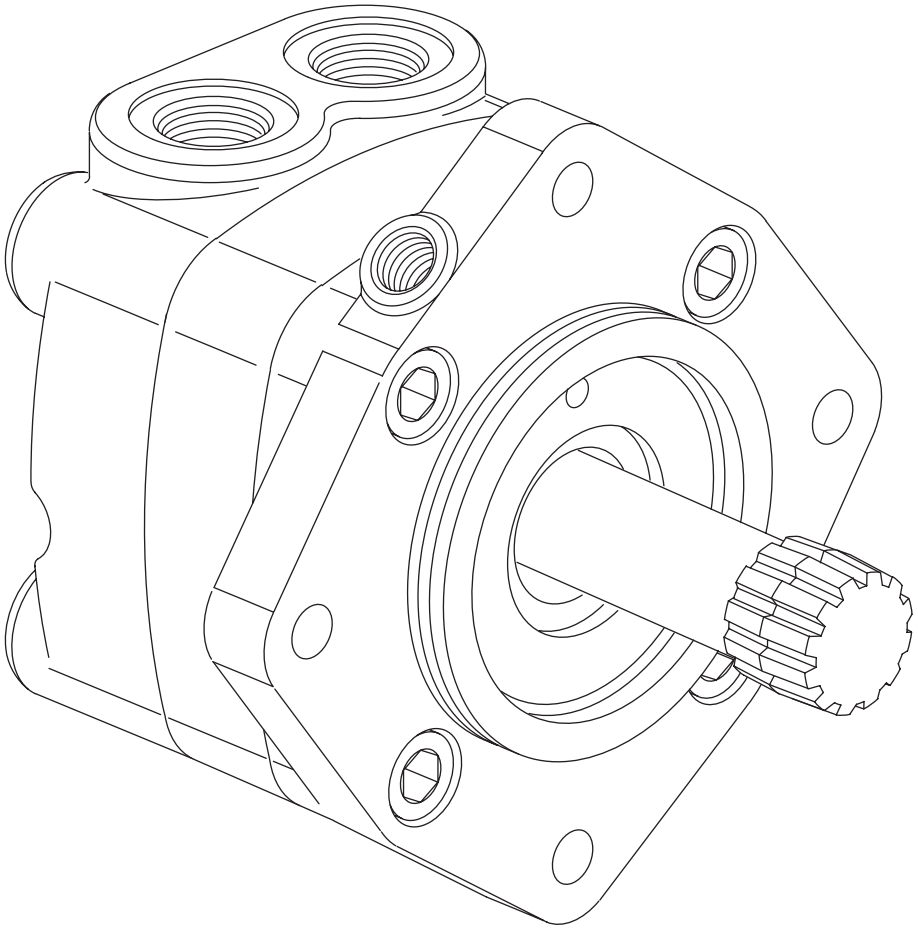

25 Series
VIS Bearingless Motor

001 002

25 Series Parts Dwg

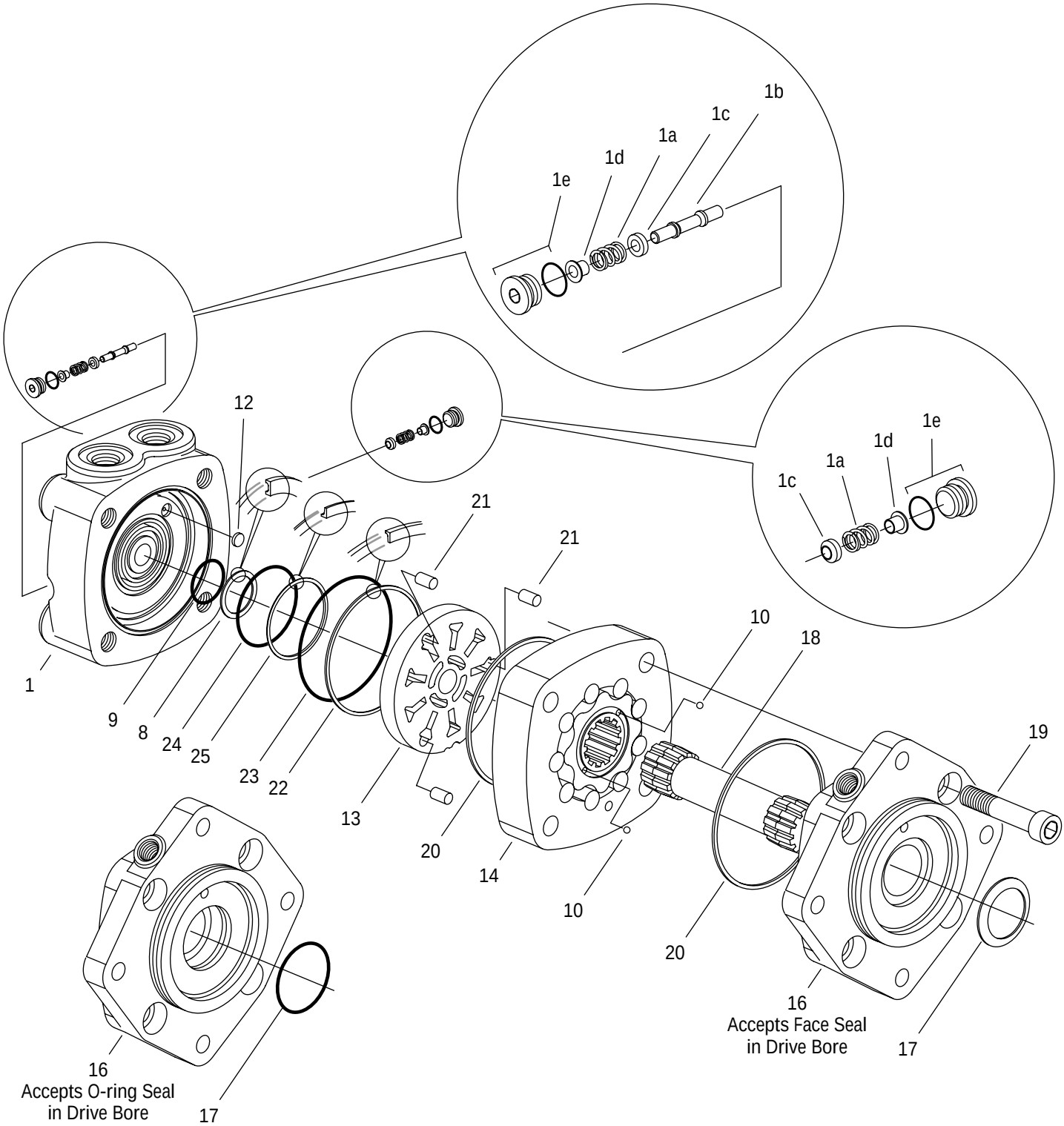

25 Series Parts List

Ref. No.	Part No.	Description	Quantity
1	22961-003	End Cap Assembly 1-1/16-12 O-ring Ports (2)	1
1a	230079-000	Spring	2
1b	8566-000	Piston Shuttle	1
1c	8567-000	Poppet	2
1d	8755-000	Sleeve, Dash Pot	2
1e	9266-006	Plug/O-ring Assembly 9/16-18 UNF	2
X	250003-906	O-ring for 9/16-18 UNF Plug	2
X 8	14516-000	Ring, Back-up	1
X 9	14502-123	O-ring	1
10	285020-060	Ball	2
12	23079-000	Disk	1
13	22960-000	Valve Plate S/A	1
14	*	Geroler®	1
16	22733-000	Flange, Mounting — O-ring Seal Groove in Drive Bore	1
	201669-001	Flange, Mounting — Drive Bore Accepts Face Seal	1
17	9080-001	Shaft Face Seal — for 201669-001 Mounting Flange	1
X	15128-000	O-ring — for 22733 Mounting Flange	1
18	*	Drive	1
19	*	Screw, Cap	4
X 20	250052-047	Seal, Square Cut	2
21	95903-062	Dowel	3
X 22	14514-000	Ring, Back-up	1
X 23	8765-154	O-ring	1
X 24	14502-142	O-ring	1
X 25	14515-000	Ring, Back-up	1
	61275-000	Seal Kit — Contains Parts Indicated by X. **Note: Shaft Face Seal 9080-001 NOT Included.**	

* See Chart Below

Displacement cm^3/r [in^3/r]	Ref. No. 14 Geroler®	Width mm [inch]	Ref. No. 18 Drive	Length mm [inch]	Item Ref. No. 19 Screw, Cap Internal Hex	Length mm [inch]
361 [22]	22644-006	33,7 [1.32]	23021-006	122,0 [4.80]	14487-006	76,2 [3.00]
393 [24]	22644-004	36,7 [1.45]	23021-004	125,1 [4.97]	14487-006	76,2 [3.00]
492 [30]	22644-005	45,9 [1.81]	23021-005	134,3 [5.29]	14487-008	88,9 [3.50]

25 Series Geroler Motors

How to Order Replacement Parts

Each Order Must Include the Following:

1. Product Number
2. Date Code
3. Part Name
4. Part Number
5. Quantity of Parts

For More Detailed Information Contact Eaton Corp. Hydraulics Division 15151 Highway 5 Eden Prairie, MN 55344.

- When servicing 25 Series VIS Motors refer to Repair Information No. 7-149. This repair manual lists tools required, and step by step disassembly and reassembly procedures.

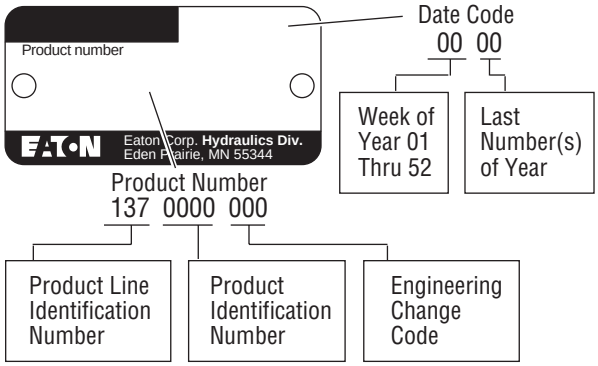

Eaton
Fluid Power Group
Hydraulics Business USA
14615 Lone Oak Road
Eden Prairie, MN 55344
USA
Tel: 952-937-9800
Fax: 952-294-7722
www.eaton.com/hydraulics

Eaton
Fluid Power Group
Hydraulics Business Europe
Route de la Longeraie 7
1110 Morges
Switzerland
Tel: +41 (0) 21 811 4600
Fax: +41 (0) 21 811 4601

Eaton
Fluid Power Group
Hydraulics Business Asia Pacific
11th Floor Hong Kong New World Tower
300 Huaihai Zhong Road
Shanghai 200021
China
Tel: 86-21-6387-9988
Fax: 86-21-6335-3912

Powering Business Worldwide

© 2008 Eaton Corporation
All Rights Reserved
Printed in USA
Document No. E-MOLO-TP004-E
Supersedes 06-151
November 2008