Eaton®

Medium Duty Piston Pump

Parts Information

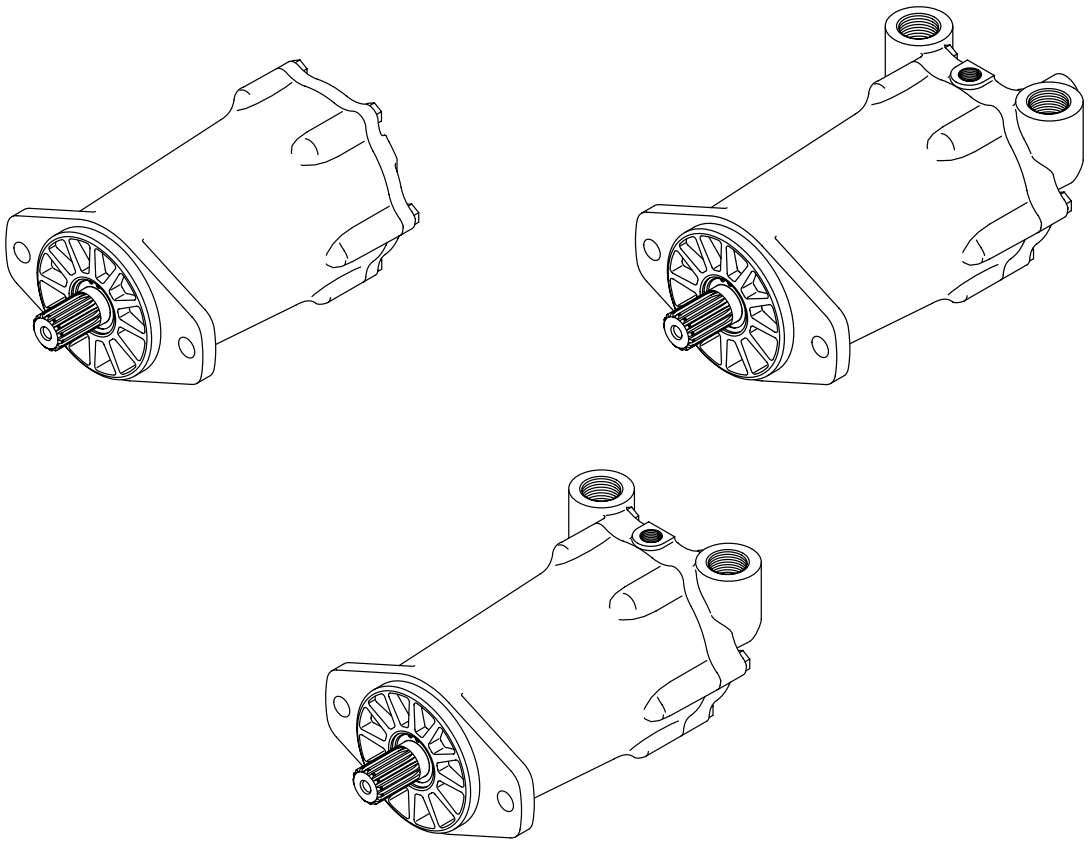

Model 74624 and 74644,

82,6 cm^3/r [5.04 in^3/r] Displacement

design code **B**

Identification and Tools Required

Identification Numbers

Stamped on each unit.

A - Product Number Descriptions
- 74624 = Fixed Motor 82,6 cm^3/r [5.04 in^3/r]
- 74644 = Fixed Motor thru Shaft for Brake Mount 82,6 cm^3/r [5.04 in^3/r]

B - Rotation,
- D = Dual

C - Sequential Letters

D - Design Code Number

Single Motor - Product Number

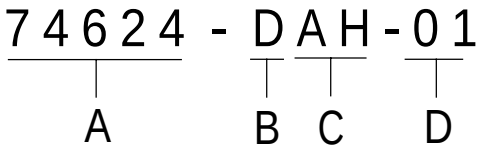

Serial Number Code:

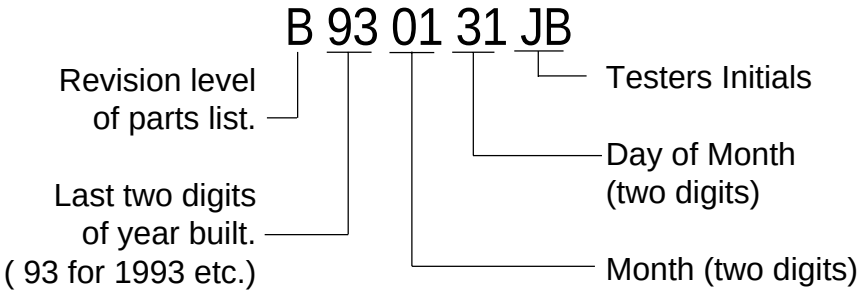

Required Tools

- 1/2 in. Socket, w/ Ratchet Wrench
- External Retaining Ring Pliers (straight .090 tip)
- Internal Retaining Ring Pliers (straight .090 tip)
- O-ring Pick
- Torque Wrench (54 N·m [40 lbf·ft] capacity)
- Hammer (soft face)
- Light Petroleum Jelly
- Seal Driver

Parts List

	Item	Part No.	Qty.	Description
	1	Refer to List	1	Drive Shaft
	2	Refer to List	1	Backplate Assembly
	3	Refer to List	1	Housing Assembly
	4	74614-50	1	Rotating Kit Assembly - Refer to specific parts list
	4a	74614-52	1	Rotating Kit Assembly - Heat Treated - Refer to specific parts list
+~	5	16009-118	1	Retaining Ring
+~	6	160015-57	1	O-ring, 2,37 mm Dia. x 114,3 mm ID. [.0937 in. Dia. x 4.5 in. ID.]
	7	74600-102	1	Thrust Bearing
	8	74600-600	2	Pivot
	9	74600-601	1	Spider
	10	74600-603	1	Key
	11	74604-5	9	Piston
	12	74604-10	9	Piston Assembly
	13	74604-59	1	Connector Plate
	14	74600-605	1	Spacer
+~	15	16232-16	1	Shaft Seal
	16	74600-100	1	Bearing Race
	17	74600-110	1	Piston Race S/A
	18	17140-1	1	Spring - Refer to specific parts list
	18a	17141-10	1	Spring - Refer to specific parts list
	18b	17142-1	1	Spring - Refer to specific parts list
	19	74600-614	1	Pilot - Refer to specific parts list
	19a	74600-620	1	Pilot - Refer to specific parts list
	20	74600-104	1	Thrust Bearing
	21	16241-D916	1	Bearing Race
	22	16032-510	6	Cap Screws, 5/16-18, 25,4 mm [1 in.] Long - Refer to specific parts list
	22a	16032-514	4	Cap Screws, 5/16-18, 38,1 mm [1.5 in.] Long - Refer to specific parts list
+~	23	16077-26	1	Retaining Ring
	24	74600-103	A/R	Trust Race
	25	24500-628	1	Key - 74624-204, 74644-210 & 74644-215
~	26	16078-16	2	Retaining Ring
	27	16241-1625	1	Thrust Bearing
	28	16241-C1625	2	Bearing Race
~	29	16232-16	1	Shaft Seal
~	30	16048-336	1	Washer
~	31	16077-26	1	Retaining Ring
	32	16032-520	2	Cap Screws, 5/16-18, 50,8 mm [2 in.] Long
+~	33	16078-16	1	Retaining Ring
	34	24500-619	1	Key - Used with Shaft 74644-214 - Refer to specific parts list
	34a	16246-430	1	Key - Used with Shaft 74644-209 & 74644-210 - Refer to specific parts list
	35	16103-106	1	Plug S/A
	35-1	16133-6	1	O-ring, 1,98 mm Dia. x 11,89 mm ID. [.078 in. Dia. x .468 in. ID.]
	36	16048-616	A/R	Washer
	37	74600-115	A/R	Washer
	38	74640-600	1	Spring Collar

Seal Repair Kit

+	74640-904	Seal Repair Kit for 74624 rear or same side ported motor.
~	74640-910	Seal Repair Kit for 74644 Through shaft motor.

Drive Shaft S/A - Item #1

Item #	Part Number	Description
1a	74624-200	15 Tooth 16/32 Spline with Snap Ring Groove with Snap Ring, .375-16 UNC-2B Thread, 18.3 [.72] Min Full Thread, Shaft Ext 39.6 [1.56]
1b	74624-201	15 Tooth 16/32 Spline with Snap Ring Groove, Shaft Ext 46 [1.81]
1c	74624-202	Taper 1:8, Dia 25.4 [1.00], Woodruff Keyway Dia 25.4 [1.00] X 6.35 [.250], .625-18 UNC-2A Thread, Shaft Ext 69 [2.72]
1d	74624-203	13 Tooth 16/32 Spline, Shaft Ext 41.1[1.62]
1e	74624-204	Straight Shaft , Dia. 25,4 [1.00], Keyway 6,35 x 38,1 [.250 x 1.50], Shaft Ext. 63,5 [2.50]
1f	74624-206	15 Tooth 16/32 Spline Tapered 1:8 with .375-16 UNC-2B Thread, 18.3 [.72] Min Full Thread, Shaft Ext 46 [1.81]

Through Shaft (74644)

Item #	Part Number	Description
1g	74644-206	Front - 15 Tooth 16/32 Spline with Snap Ring Groove with Snap Ring, .375-16 UNC-2B Thread, 18.3 [.72] Min Full Thread, Shaft Ext 39.6 [1.56] Rear - 15 Tooth 16/32 Spline, Shaft Length From Mounting Flange 258.6 [10.18]
1h	74644-209	Front - 15 Tooth 16/32 Spline Tapered 1:8 with .375-16 UNC-2B Thread, 18.3 [.72] Min Full Thread, Shaft Ext 46 [1.81] Rear - Straight Shaft Dia 25.4 [1.00], Keyway 6.3 X 25.4 [.250 X 1.00], Shaft Length from Mounting Flange 274.3 [10.80]
1i	74644-210	Front - Straight Shaft , Dia. 25,4 [1.00], Keyway 6,35 x 38,1 [.250 x 1.50], Shaft Ext. 63,5 [2.50] (Key Included) Rear - Straight Shaft Dia 25.4 [1.00], Keyway 6.3 X 25.4 [.250 X 1.00], Shaft Length from Mounting Flange 274.3 [10.80]
1j	74644-212	Front - 15 Tooth 16/32 Spline Tapered 1:8 with .375-16 UNC-2B Thread, 18.3 [.72] Min Full Thread, Shaft Ext 46 [1.81] Rear - 15 Tooth 16/32 Spline, with .375-16 UNC-2B Thread, 18.3 [.72] Min Full Thread, Shaft Length from Mounting Flange 274.3 [10.80]
1k	74644-214	Front - 15 Tooth 16/32 Spline, Shaft Ext 46 [1.81] Rear - Straight Shaft Dia 22.22 [.875], Keyway 6.35 X 26.9 [.250 X 1.06], Shaft Length from Mounting Flange 271.5 [10.69] (Short Key Included)
1l	74644-215	Front - Taper .125:1 Dia 22.22 [.875], Woodruff Keyway Dia 15.75 [.620] X 3.96 [.156], .500-20 UNF-2A Thread, Shaft Ext 57.9 [2.28] Rear - Straight Shaft Dia 25.4 [1.00], Keyway 6.35 X 38.4 [.250 X 1.51], Shaft Length from Mounting Flange 292.1 [11.50]
1m	74644-216	Front - Taper .125:1 Dia 22.22 [.875], Woodruff Keyway Dia 15.75 [.620] X 3.96 [.156], .500-20 UNF-2A Thread, Shaft Ext 57.9 [2.28] Rear - Straight Shaft Dia 25.4 [1.00], Shaft Length from Mounting Flange 254 [10.00], Shaft End Hole Internal 6.40 [.252] X 14 [.55] Deep

Backplate S/A - Item #2

Item #	Part Number	Description
2a	74624-301	Rear porting, through drain into mounting flange
2b	74624-305	Rear porting, drain port Horizontal top rear of unit
2c	74624-315	Same side porting, drain port vertical top rear of unit, two mounting holes bottom rear
2d	74624-317	Same side porting, drain port vertical top rear of unit

Housing for Through Shaft (74644)

Item #	Part Number	Description
2e	74644-308	Same side porting, drain port vertical top rear of unit

Housing S/A - Item #3

Item #	Part Number	Description
3a	74624-303	Through drain into mounting flange
3b	74624-307	No drain in housing
3c	74624-309	Special housing used with item 18 #17141-10 and item 19 #74600-620. Also has slotted 2 bolt B flange.

Parts Drawing

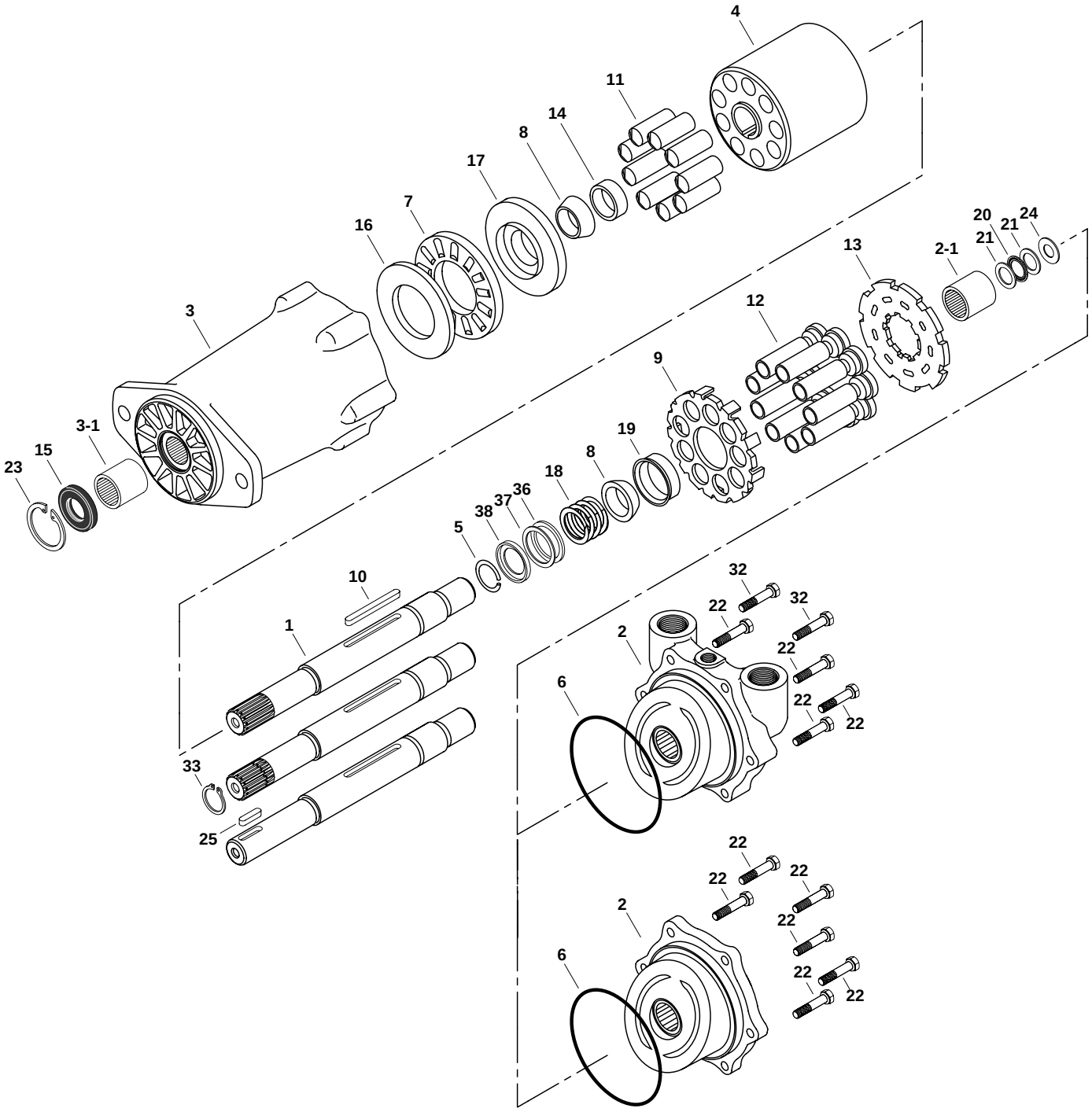

Specific Parts List

		Product Numbers 74624												
		- DAA	- DAB	- DAD	- DAE	- DAG	- DAH	- DAJ	- DAL	- DAM	- DAN	- DAP	- DAR	- DAS
Item #'s	1	1a	1b	1c	1d	1d	1e	1a	1e	1f	1f	1b	1b	1f
	2	2a	2b	2b	2b	2b	2b	2b	2c	2c	2d	2b	2b	2d
	3	3a	3b	3b	3c	3b	3b	3b	3b	3b	3b	3b	3b	3b
	4	4	4	4	4	4	4	4	4	4	4	4	4a	4
	5	X	X	X	X	X	X	X	X	X	X	X	X	X
	6	X	X	X	X	X	X	X	X	X	X	X	X	X
	7	X	X	X	X	X	X	X	X	X	X	X	X	X
	8	X	X	X	X	X	X	X	X	X	X	X	X	X
	9	X	X	X	X	X	X	X	X	X	X	X	X	X
	10	X	X	X	X	X	X	X	X	X	X	X	X	X
	11	X	X	X	X	X	X	X	X	X	X	X	X	X
	12	X	X	X	X	X	X	X	X	X	X	X	X	X
	13	X	X	X	X	X	X	X	X	X	X	X	X	X
	14	X	X	X	X	X	X	X	X	X	X	X	X	X
	15		X	X	X	X	X	X	X	X	X	X	X	X
	16	X	X	X	X	X	X	X	X	X	X	X	X	X
	17	X	X	X	X	X	X	X	X	X	X	X	X	X
	18	18	18b	18b	18a	18b	18b	18b	18b	18	18	18b	18b	
	19	19	19	19	19a	19	19	19	19	19a	19a	19	19	
	20	X	X	X	X	X	X	X	X	X	X	X	X	X
	21	X	X	X	X	X	X	X	X	X	X	X	X	X
	22	22	22	22	22	22	22	22	22a	22a	22a	22	22	22a
	23		X	X	X	X	X	X	X	X	X	X	X	X
	24	X	X	X		X	X	X	X	X	X	X	X	X
	25						X		X					
	32								X	X	X			X
	33	X						X						
	36									X	X			
	37									X	X			
	38				X					X	X			
Seal Repair Kit 72640		-904	-904	-904	-904	-904	-904	-904	-904	-904	-904	-904	-904	-904

Parts Drawing - Through Shaft

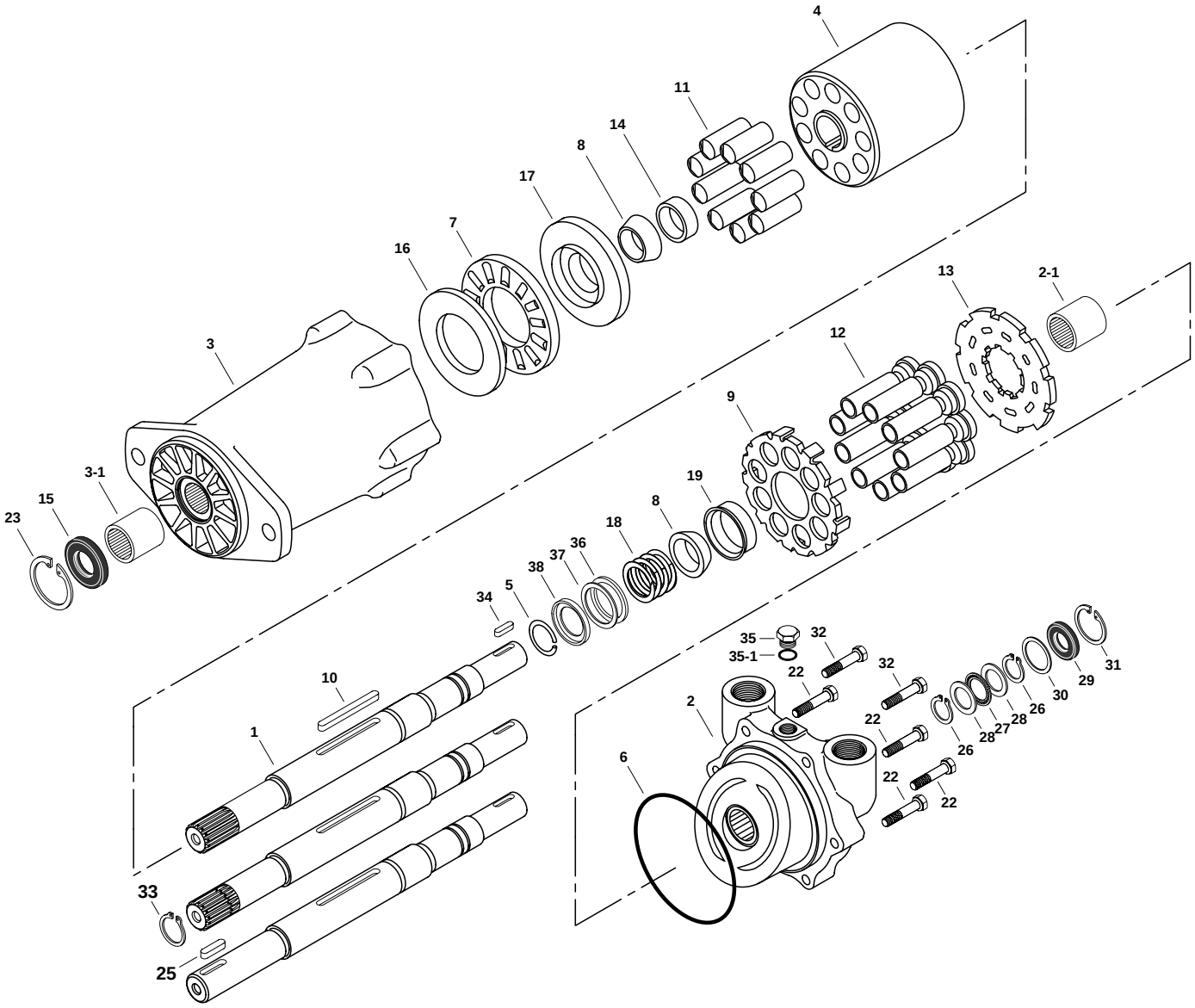

Specific Parts List

		Product Numbers 74644								
		- DAE	- DAG	- DAJ	- DAK	- DAM	- DAN	- DAP	- DAR	- DAS
Item #'s	1	1g	1h	1i	1j	1k	1l	1m	1j	1j
	2	2e	2e	2e	2e	2e	2e	2e	2e	2e
	3	3b	3a	3b	3a	3b	3b	3b	3a	3b
	4	4	4	4	4	4	4	4	4	4
	5	X	X	X	X	X	X	X	X	X
	6	X	X	X	X	X	X	X	X	X
	7	X	X	X	X	X	X	X	X	X
	8	X	X	X	X	X	X	X	X	X
	9	X	X	X	X	X	X	X	X	X
	10	X	X	X	X	X	X	X	X	X
	11	X	X	X	X	X	X	X	X	X
	12	X	X	X	X	X	X	X	X	X
	13	X	X	X	X	X	X	X	X	X
	14	X	X	X	X	X	X	X	X	X
	15	X		X		X	X	X		X
	16	X	X	X	X	X	X	X	X	X
	17	X	X	X	X	X	X	X	X	X
	18	18	18	18	18	18	18	18	18	18
	19	19	19a	19	19a	19a	19	19	19a	19a
	22	22a	22a	22a	22a	22a	22a	22a	22a	22a
	23	X		X			X	X		X
	25			X						
	26	X	X	X	X	X	X	X	X	X
	27	X	X	X	X	X	X	X	X	X
	28	X	X	X	X	X	X	X	X	X
	29	X	X	X	X	X	X	X	X	X
	30	X	X	X	X	X	X	X	X	X
	31	X	X	X	X	X	X	X	X	X
	32	X	X	X	X	X	X	X	X	X
	33	X								
	34		34	34		34a				
	35		X		X				X	
	36		X		X	X			X	
	37		X		X	X			X	
	38	X	X	X	X	X	X	X	X	X
Seal Repair Kit 74640		-910	-910	-910	-910	-910	-910	-910	-910	-910

Notes

Notes

Eaton
Fluid Power Group
Hydraulics Business USA
14615 Lone Oak Road
Eden Prairie, MN 55344
USA
Tel: 952-937-9800
Fax: 952-294-7722
www.eaton.com/hydraulics

Eaton
Fluid Power Group
Hydraulics Business Europe
Route de la Longeraie 7
1110 Morges
Switzerland
Tel: +41 (0) 21 811 4600
Fax: +41 (0) 21 811 4601

Eaton
Fluid Power Group
Hydraulics Business Asia Pacific
11th Floor Hong Kong New World Tower
300 Huaihai Zhong Road
Shanghai 200021
China
Tel: 86-21-6387-9988
Fax: 86-21-6335-3912

Powering Business Worldwide

© 2008 Eaton Corporation
All Rights Reserved
Printed in USA
Document No. E-MOPI-TP001-E
Supersedes 06-161
October 2008