Hydraulics

Quadrature Speed Sensor for Heavy Duty, Hydrostatic Fixed Displacement Piston Motors

Technical Data Sheet

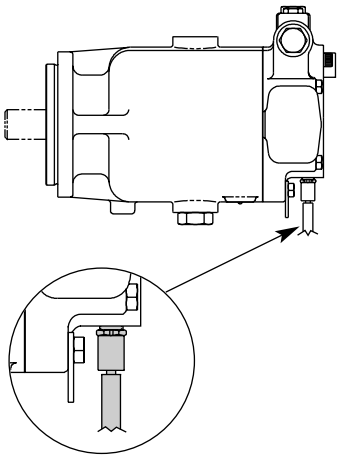

Eaton's new Quadrature speed sensor, available as an optional feature in all Heavy Duty Hydrostatic fixed displacement motors, provides both speed and direction signals.

Based on the field proven technology of our Hall Effect and Magnetic sensors, it is designed for use in the demanding off-road, mobile equipment environment.

Two different versions are available with the following output capabilities:

Quadrature

- Two output signals 90° out of phase.
- Each output provides one pulse per target tooth.
- Twelve pulses per revolution from each output.

Quadrature with decoded direction signal

- Speed signal that is twice the output pulses per revolution (24)
- Directional signal.
- 24 symmetrical pulses per revolution with the 12-tooth target.

Signal and application info: Outputs

NPN open collector output with internal 10K pull-up resistors.

An external pull-up resistor can be added to increase the signal strength. The sensor output will not sink more than 10mA quadrature.

Sensor has reverse polarity protection.

- Short circuit protection.
- Load dump protection
- EMC (Electrical Magnetic Compatibility) protection.

Users should verify EMC in each specific application.

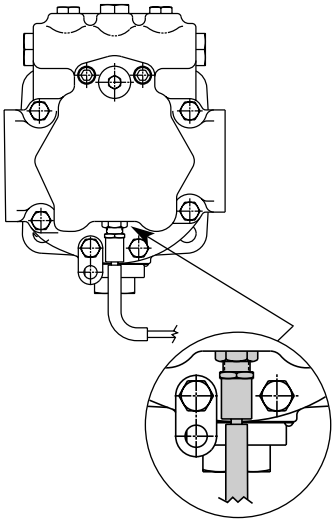

SPECIFICATIONS

Supply Voltage	8 to 24 Vdc* (Compatible with 12V vehicle conditions)
Supply Current	40 mA max. (Including internal pull-up resistors)
Output Low Voltage	0.5 Vdc maximum @ 10 mA

*Note: The sensor will operate at lower regulated voltages (5 Vdc +10%), however, EMC protection will be reduced.

WIRING INTERFACE INFORMATION	WEATHERPACK CONNECTOR PIN IDENTIFICATION
Quadrature Version	Position A (red) = power supply
Part No. 114264-001	Position B (black) = common
	Position C (orange) output one
	Position D (yellow) = output two
Quadrature With Decoded	Position A (red) = power supply
Direction Signal Version	Position B (black) = common
Part No. 114264-002	Position C (orange) = speed signal
	Position D (yellow) = direction

MATING CONNECTOR KIT

2´ Pig Tail	112873-006	Color Code V1
	112873-007	Color Code V2

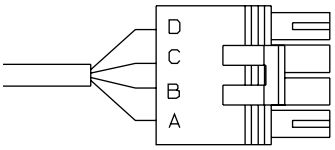

Connections —

Standard 4 pin Weatherpack connector with 18 AWG (American Wire Gage) cables or M12 threaded connector.

MODEL CODE REFERENCE

PRODUCT LINE	FEATURE DESCRIPTION	CODE POSITION	CODE
HD Fixed Motors	Quadrature Sensor	18	E
HD Fixed Motors	Quadrature Sensor with Decoded Direction Signal	18	D

KIT NUMBER	DESCRIPTION	CONTAINS
9900121-001	Quadrature Sensor	Quadrature Sensor and Installation Instructions
9900121-002	Quadrature Sensor with Decoded Direction Signal	Quadrature Sensor and Installation Instructions

***Note:** The speed sensor option does NOT include read-out display.

Read-out displays such as those offered by Eaton Corporation can be used together with this feature option.

Eaton Corporation
Durant Products
901 South 12th Street
Watertown, WI 57094
1-800-289-3866

Eaton
14615 Lone Oak Road
Eden Prairie, MN 55344
USA
Tel: 952 937-9800
Fax: 952 974-7722
www.hydraulics.eaton.com

Eaton
20 Rosamond Road
Footscray
Victoria 3011
Australia
Tel: (61) 3 9319 8222
Fax: (61) 3 9318 5714

Eaton
Dr.-Reckeweg-Str. 1
D-76532 Baden-Baden
Germany
Tel: (49) 7221 682-0
Fax: (49) 7221 682-788

EATON | Hydraulics

© 2003 Eaton Corporation
All Rights Reserved
Printed in USA
Document No. E-MOPI-TH001-E
March 2003