**Eaton®**
Heavy Duty Hydrostatics

October, 1993

# Parts Information

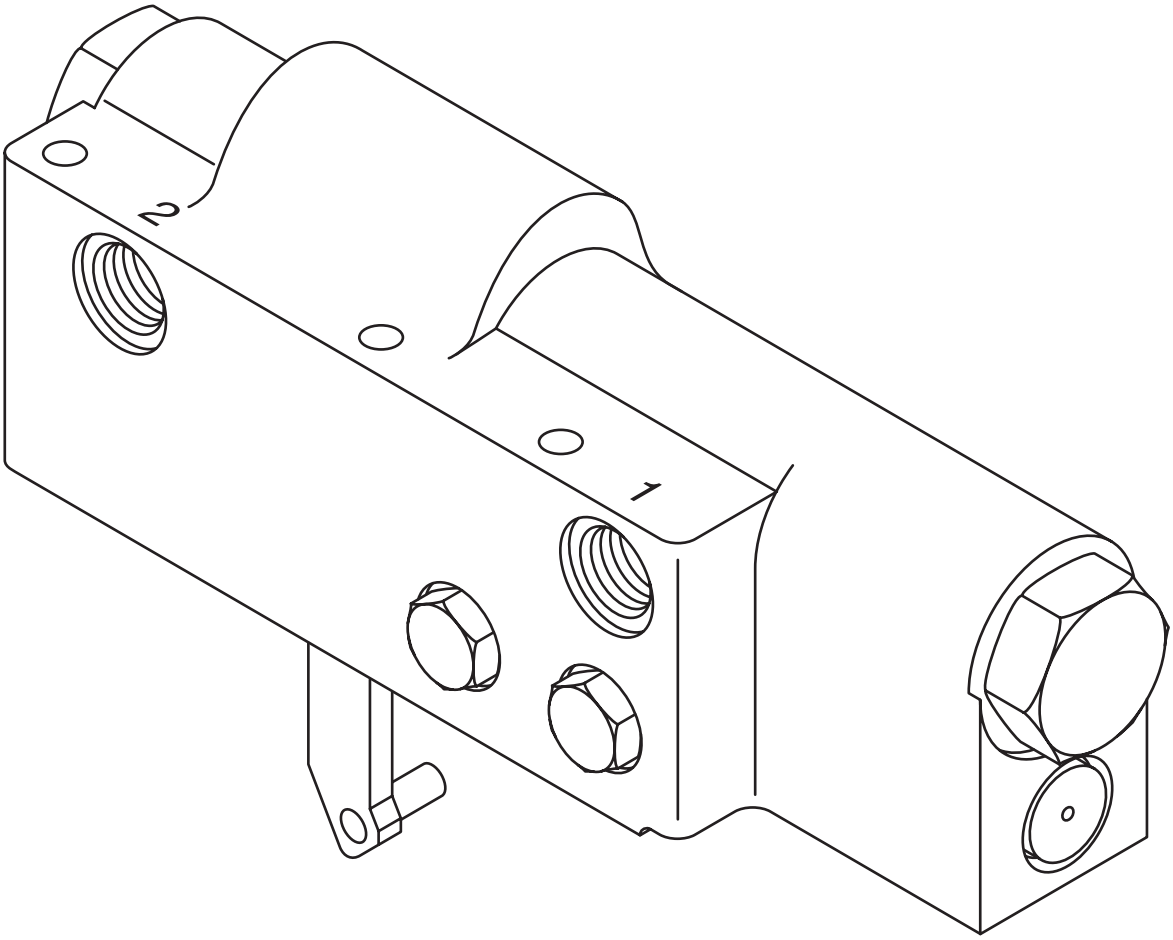


## Hydraulic Remote Controller

# Parts Drawing

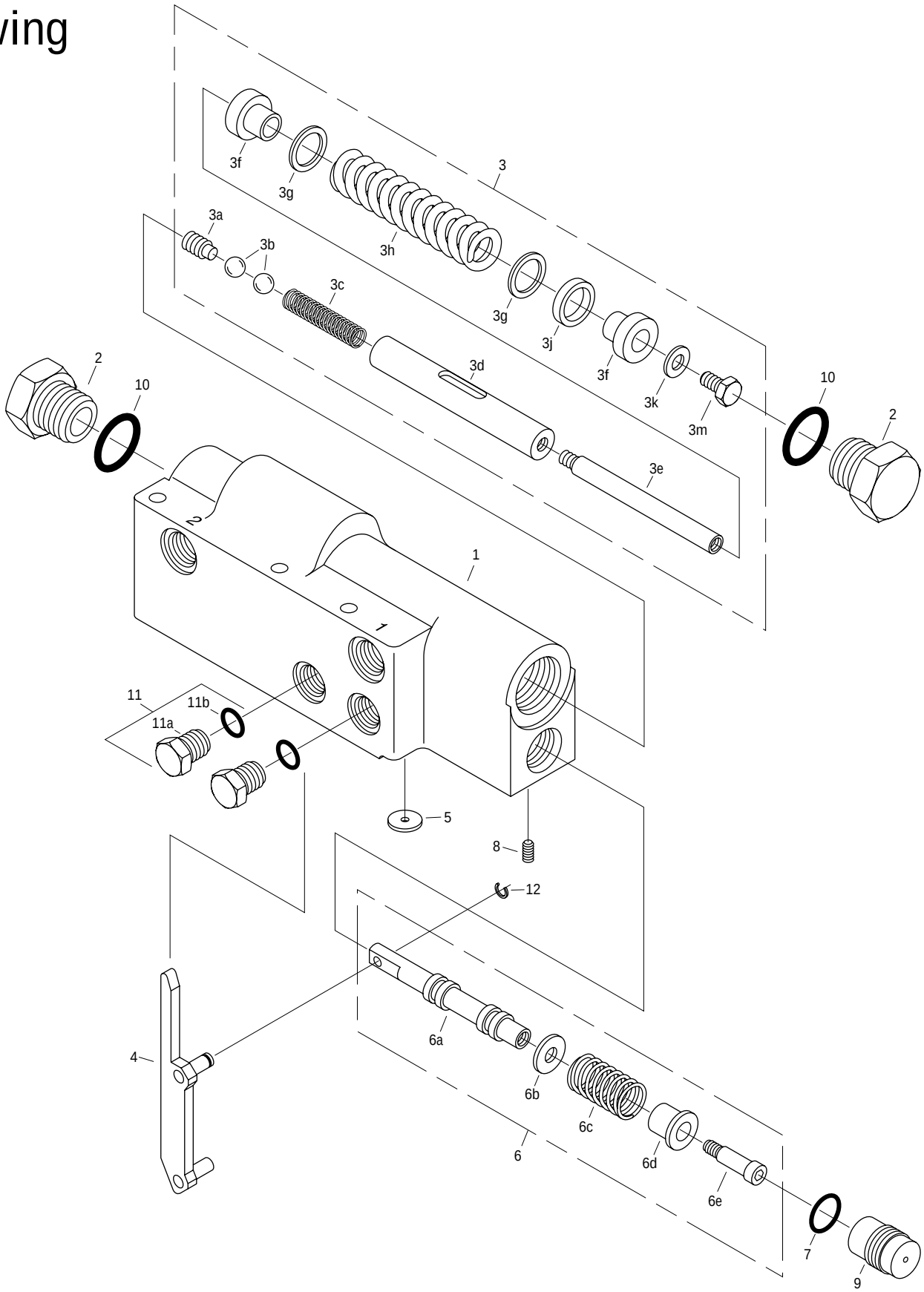

# Parts List

| Item | Part Number | Description | Qty. |
|---|---|---|---|
| 1 | 102519 - 000 | Housing | 1 |
| 2 | 102871 - 000 | Plug | 2 |
| 3 | ◊ | Control Piston Subassembly | 1 |
| 3a | 102556 - 000 | Set Screw 3/8-16 | 1 |
| 3b | 95881 - 031 | Ball – Grade 200 | 2 |
| 3c | 102502 - 000 | Centering Spring | 1 |
| 3d | NSS | Control Piston | 1 |
| 3e | NSS | Bushing Rod | 1 |
| 3f | NSS | Piston Bushing | 2 |
| 3g | NSS | Bushing Washer | 2 |
| 3h | NSS | Control Spring | 1 |
| 3j | NSS | Spacer* | 1 |
| 3k | NSS | Washer | 1 |
| 3m | NSS | Bolt 1/4-20 | 1 |
| 4 | 102509 - 000 | Control Link (Models 33 – 64) | 1 |
| 4 | 102873 - 000 | Control Link (Models 33 – 64 with POR) | 1 |
| 4 | 102657 - 000 | Control Link (Model 76) | 1 |
| 4 | 102875 - 000 | Control Link (Model 76 with POR) | 1 |
| 5 | ◊ | Orifice | 1 |
| 6 | 25471 - 000 | Control Spool Subassembly | 1 |
| 6 | 101336 - 000 | Control Spool Subassembly – Wide Band Neutral | 1 |
| 6a | NSS | Control Spool | 1 |
| 6a | NSS | Control Spool – Wide Band Neutral | 1 |
| 6b | NSS | Spring Washer | 1 |
| 6c | NSS | Control Spool Spring | 1 |
| 6d | NSS | Spring Retainer | 1 |
| 6e | NSS | Shoulder Screw | 1 |
| 7 | 8761 - 016 | O-ring | 1 |
| 8 | 98361 - 038 | Set Screw | 1 |
| 9 | 101373 - 000 | Spring Box Adjustment Screw | 1 |
| 10 | 8785 - 012 | Tube Fitting O-ring | 2 |
| 11 | 25090 - 006 | O-ring Plug Subassembly | 2 |
| 11a | NSS | Plug | 2 |
| 11b | 8785 - 006 | O-ring | 2 |
| 12 | 96098 - 025 | Retaining Ring | 1 |

* – Not used on all units
◊ – See table for specific part number
NSS – Not Sold Separately

**Hydraulic Remote Controller Kits**

Kits contain controller, orifice, mounting bolts, and gasket.

When ordering, put the desired orifice size, in thousandths of an inch, in place of the - XXX at the end of the kit number. See the Item 5 – Orifice table for available sizes.

| Model | Pressure Range (bar [PSI]) | Special Features | Kit Number |
|---|---|---|---|
| 33 – 64 | .69 - 10.35 [0 - 150] | | 990196 - XXX |
| 33 – 64 | 3.44 - 12.41 [50 - 180] | | 990197 - XXX |
| 76 | .69 - 10.35 [0 - 150] | | 990241 - XXX |
| 76 | 3.44 - 12.41 [50 - 180] | | 990242 - XXX |
| 33 – 64 | 4.96 - 14.96 [ 72 - 217] | | 990243 - XXX |
| 33 – 64 | .69 - 10.35 [0 - 150] | POR | 990265 - XXX |
| 76 | .69 - 10.35 [0 - 150] | POR | 990266 - XXX |
| 33 – 64 | 3.44 - 12.41 [50 - 180] | POR | 990267 - XXX |
| 76 | 3.44 - 12.41 [50 - 180] | POR | 990268 - XXX |
| 33 – 64 | 4.96 - 14.96 [ 72 - 217] | POR | 990269 - XXX |
| 33 – 64 | 13.79 - 24.13 [200 - 350] | POR | 990270 - XXX |
| 76 | 13.79 - 24.13 [200 - 350] | POR | 990271 - XXX |
| 33 – 64 | 13.79 - 24.13 [200 - 350] | | 990326 - XXX |
| 76 | 4.96 - 14.96 [ 72 - 217] | | 990335 - XXX |

**Item 3 – Control Piston Subassembly**

| Pressure Range (bar [PSI]) | Part Number |
|---|---|
| .69 - 10.35 [0 - 150] | 102515 - 000 |
| 3.44 - 12.41 [50 - 180] | 102516 - 000 |
| 4.96 - 14.96 [ 72 - 217] | 102661 - 000 |
| 13.79 - 24.13 [200 - 350] | 102878 - 000 |

**Item 5 – Orifice**

| Orifice Size (inches) | Part Number |
|---|---|
| .028 | 101619 - 028 |
| .036 | 101619 - 036 |
| .044 | 101619 - 044 |
| .052 | 101619 - 052 |
| .057 | 101619 - 057 |
| .065 | 101619 - 065 |
| .073 | 101619 - 073 |
| .094 | 101619 - 094 |
| .102 | 101619 - 102 |

Eaton
Fluid Power Group
Hydraulics Business USA
14615 Lone Oak Road
Eden Prairie, MN 55344
USA
Tel: 952-937-9800
Fax: 952-294-7722
www.eaton.com/hydraulics

Eaton
Fluid Power Group
Hydraulics Business Europe
Route de la Longeraie 7
1110 Morges
Switzerland
Tel: +41 (0) 21 811 4600
Fax: +41 (0) 21 811 4601

Eaton
Fluid Power Group
Hydraulics Business Asia Pacific
11th Floor Hong Kong New World Tower
300 Huaihai Zhong Road
Shanghai 200021
China
Tel: 86-21-6387-9988
Fax: 86-21-6335-3912

Powering Business Worldwide

© 2008 Eaton Corporation
All Rights Reserved
Printed in USA
Document No. E-MOPI-TP002-E
Supersedes 06-430
December 2008