Service Bulletin

Eaton®

Heavy Duty – Models 33 thru 76

Tapered Shaft Nut Torque Specifications

Be advised that the shaft nut torque specifications on the Heavy Duty Series Models 33 thru 76 has been increased. Note the new torque values listed below.

To help in the removal of the Yoke we suggest using a Tapered Shaft Yoke Puller Tool, which is described on back of this form.

This Service Bulletin replaces previous versions as we discovered some errors in the dimensions referenced on the Tapered Shaft Yoke Puller Tool. Plus we reduced the required effective thread length size of the 7/8" bolt. We found that 2" effective thread length works fine and this type of bolt is more easily sourced. We apologize for any inconvenience these errors may have caused.

Tapered Shaft Models 33 thru 64
Compatible with ISO 3019/1
(SAE-J744) Specifications

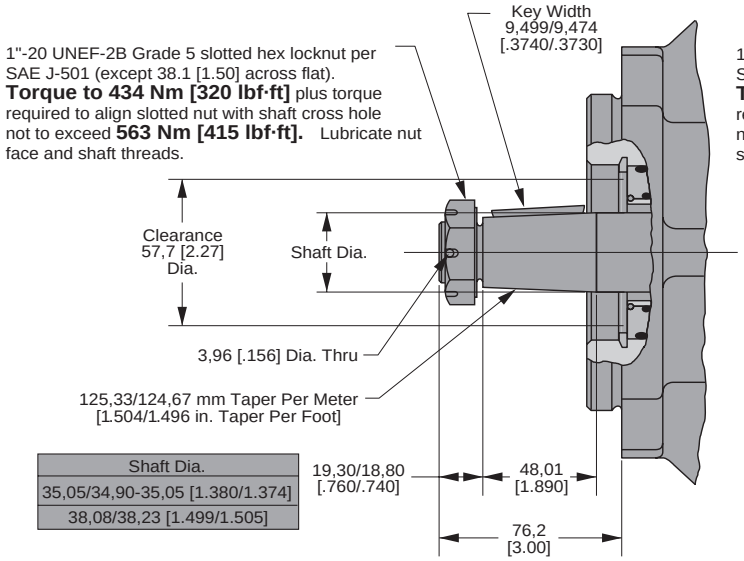

Shaft Dia.
35,05/34,90-35,05 [1.380/1.374]
38,08/38,23 [1.499/1.505]

Tapered Shaft Model 76
Compatible with ISO 3019/1
(SAE-J744) Specifications

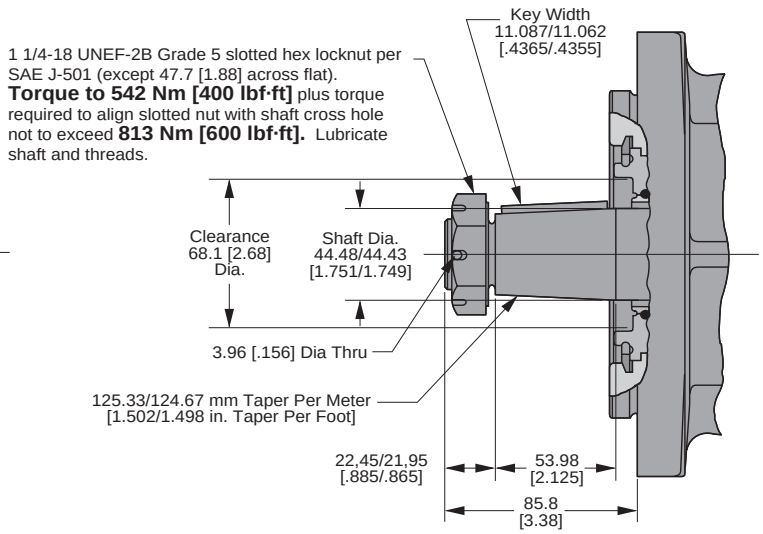

All dimensions given in millimeters [inches].

Heavy Duty Series
Tapered Shaft Torque – Specifications

Tapered Shaft Yoke Puller

(for 1310 and 1350 Yokes)

Recomended Dimensions for Fabrication

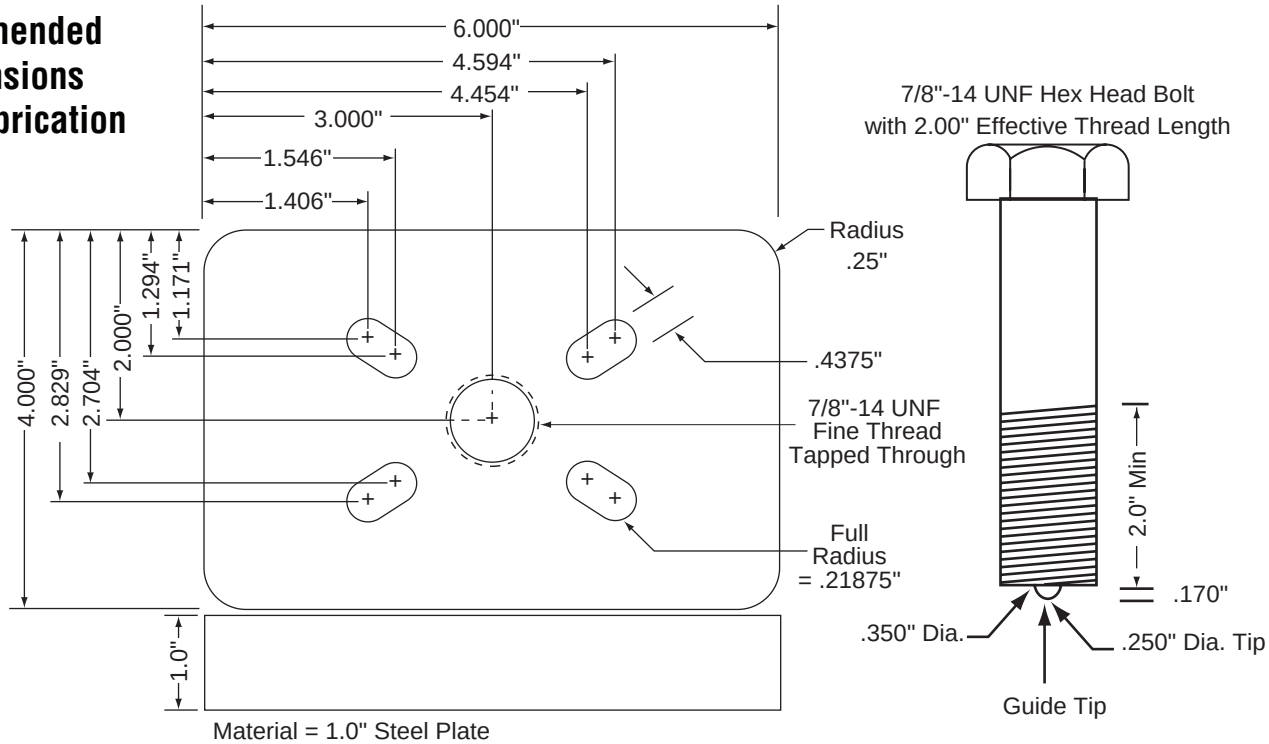

Material = 1.0" Steel Plate

(4) 5/16"-18 x 2.5" Hex Head Bolts, Nuts and Flat Washers

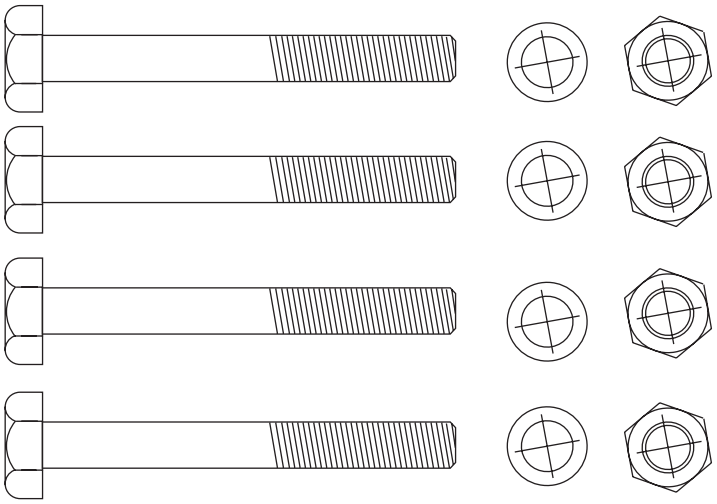

Eaton
Fluid Power Group
Hydraulics Business USA
14615 Lone Oak Road
Eden Prairie, MN 55344
USA
Tel: 952-937-9800
Fax: 952-294-7722
www.eaton.com/hydraulics

Eaton
Fluid Power Group
Hydraulics Business Europe
Route de la Longeraie 7
1110 Morges
Switzerland
Tel: +41 (0) 21 811 4600
Fax: +41 (0) 21 811 4601

Eaton
Fluid Power Group
Hydraulics Business Asia Pacific
11th Floor Hong Kong New World Tower
300 Huaihai Zhong Road
Shanghai 200021
China
Tel: 86-21-6387-9988
Fax: 86-21-6335-3912

Powering Business Worldwide

© 2008 Eaton Corporation
All Rights Reserved
Printed in USA
Document No. E-MOPI-TB004-E
Supersedes 00-SB980901
December 2008