Service Data

Vickers®

Pumps

Integrated Motor Pump

MP15, MP22, MP45, MP75 & MP92
15 kW, 20 hp to 92 kW, 125 hp

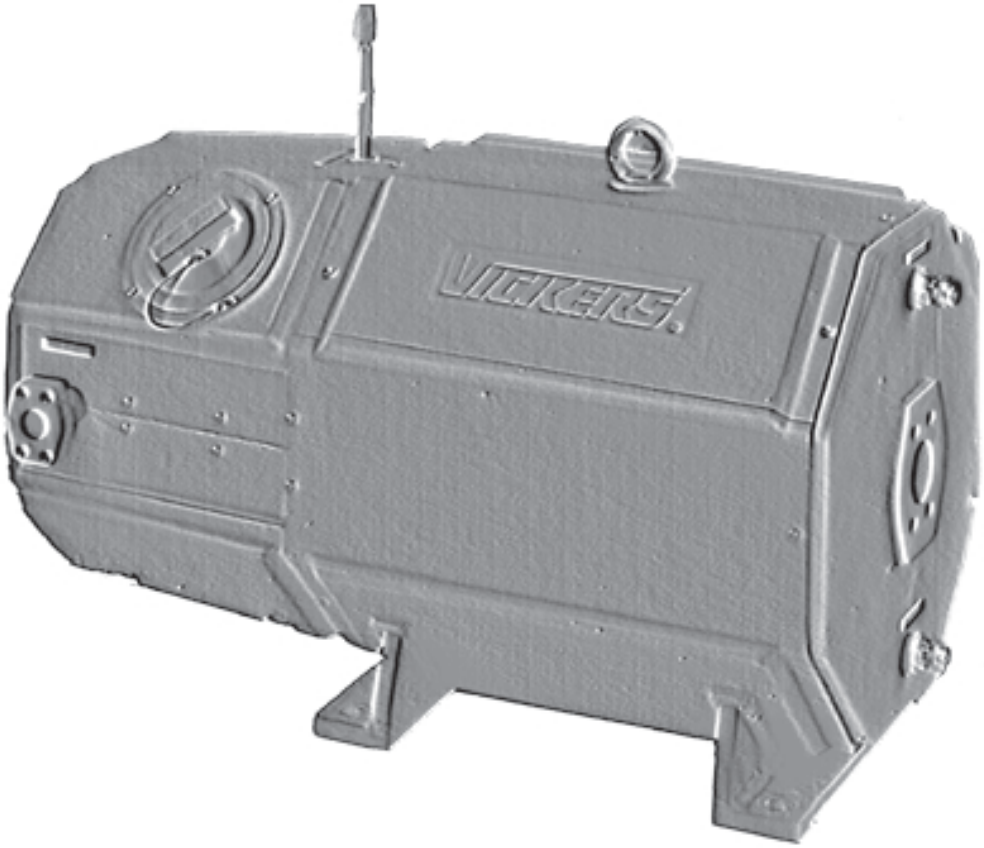

VICKERS

Introduction

The Vickers Integrated Motor Pump is a unique combination of a conventional AC induction motor cooled with system hydraulic oil and a Vickers hydraulic pump, either fixed vane pump or variable piston type, housed in a special sound reduction enclosure.

This combination provides an exceptionally quiet and small pumping package for any industrial application requiring up to 125 horsepower (92 kilowatts) of continuous hydraulic power.

The package comes completely assembled, tested, and ready for installation.

Circulating the hydraulic oil through the motor, bathing both the rotor and stator, makes it possible to obtain twice the normal continuous output power from the motor windings. As a result, physical size reductions of 35% to 50% compared with conventional pumping packages are possible. Normal operation of the motor is not affected by circulating oil through it, nor is the system's hydraulic oil damaged.

Heat generated within the electric motor is carried away by the hydraulic fluid and dissipated by the hydraulic cooling system. A motor fan is not needed, which makes it practical to cover the entire assembly (motor and pump) with a compact, polyethylene sound reduction enclosure. This reduces the sound from the pump as well as the motor, resulting in a noise level reduction that is unsurpassed in the industry.

A complete line of standard Vickers pumps can be fitted to the Integrated Motor Pump including single fixed vane pumps, single variable piston pumps, double vane pumps, double piston pumps or mixed vane and piston combinations.

Model Code

MP ** - B 1 - R - P * *** /V **** * - A - ** - 20 - *****

1 2 3 4 5 6 7 8 9 10 11 12 13

1 Model Series

MP - Integrated Motor Pump

2 Motor Power (sizes)

15 - 15 kW, 20 hp
22 - 22 kW, 30 hp
45 - 45 kW, 60 hp
75 - 75 kW, 100 hp
92 - 92 kW, 125 hp

3 Voltage

A▲ - 230V 60 Hz
B† - 460V 60 Hz
C - 575V 60 Hz
D - 380V 50 Hz
E - 380V 60 Hz
F - 400V 50Hz
G - 220V 60Hz
H - 500V 50Hz

4 Winding Type

1 - Standard

5 Terminal Box Position (viewed from motor end)

R† - Right side
L - Left side

6 Hydraulic Pump Type

P - Variable piston
V - Vane

† Preferred option
▲ Only available on MP15 & MP22 models.

7 Pump Displacement (cm^3/rev)

Piston:
20, 32, 40, 45, 57, 74, 98, 131
Single vane:
18, 27, 36, 40, 45, 55, 67, 81, 97, 112, 121, 138, 162, 193
Double vane - shaft end:
40, 45, 55, 67, 81, 97, 112, 121, 138, 162
Double vane - cover end:
18, 27, 36, 40, 45, 55, 67
Example: P20
V40
V4018

NOTE: When ordering double vane pump, designate shaft and cover end displacements.

8 Pump Control Type

N - No control (vane pump only)

Piston pumps with cm^3/rev displacements of 20, 32, 40, 45:

C - Pressure compensator (20, 40 cm^3/rev) - Range is 25-210 bar (350-3000 psi), standard factory setting is 210 bar (3000 psi).
C - Pressure compensator (32, 45 cm^3/rev) - Range is 25-138 bar (350-2000 psi), standard factory setting is 138 bar (2000 psi).
CM - Pressure compensator range is 25-70 bar (350-1000 psi), standard factory setting is 70 bar (1000 psi).
CV - Pressure compensator with load sensing (20, 40 cm^3/rev) - Range is 25-210 bar (350-3000 psi), standard factory setting is 210 bar (3000 psi).
CV - Pressure compensator with load sensing (32, 45 cm^3/rev) - Range is 25-138 bar (350-2000 psi), standard factory setting is 140 bar (2000 psi).

Piston pumps with cm^3/rev displacements of 57, 74, 98, 131:

C - Pressure compensator (20, 40 cm^3/rev) - Range is 70-250 bar (1000-3600 psi), standard factory setting is 250 bar (3600 psi).
CM - Pressure compensator range is 40-70 bar (580-1000 psi), standard factory setting is 70 bar (1000 psi).
CV - Pressure compensator with load sensing, range is 70-280 bar (1000-4060 psi), standard factory setting is 250 bar (3600 psi).

9 Second Pump Code (if required)

NOTE: Second pump code must be preceded by a slash (/).
Example: P57C / V45N; or P57C/P57C

10 Outlet Position (viewed from electric motor end)

A† - 12 o'clock
B - 3 o'clock
C - 9 o'clock

Note: On piston pump units the case drain will always be at the 12 o'clock position.

11 Main Port Connections

F1† - 4-bolt flange port, ISO 6162-Type 1 (inch)
F2 - 4-bolt flange port, ISO 6162-Type 2 (metric)

12 Design Number

Subject to change. Installation dimensions unaltered for design numbers 20 through 29 inclusive.

13 Special Feature Suffix

S5 - Non-flooded inlet
S22 - Wye (start) / Delta (run) motor winding
** - Contact Vickers representative for further information regarding S**

15 & 22 kW Electric Motor

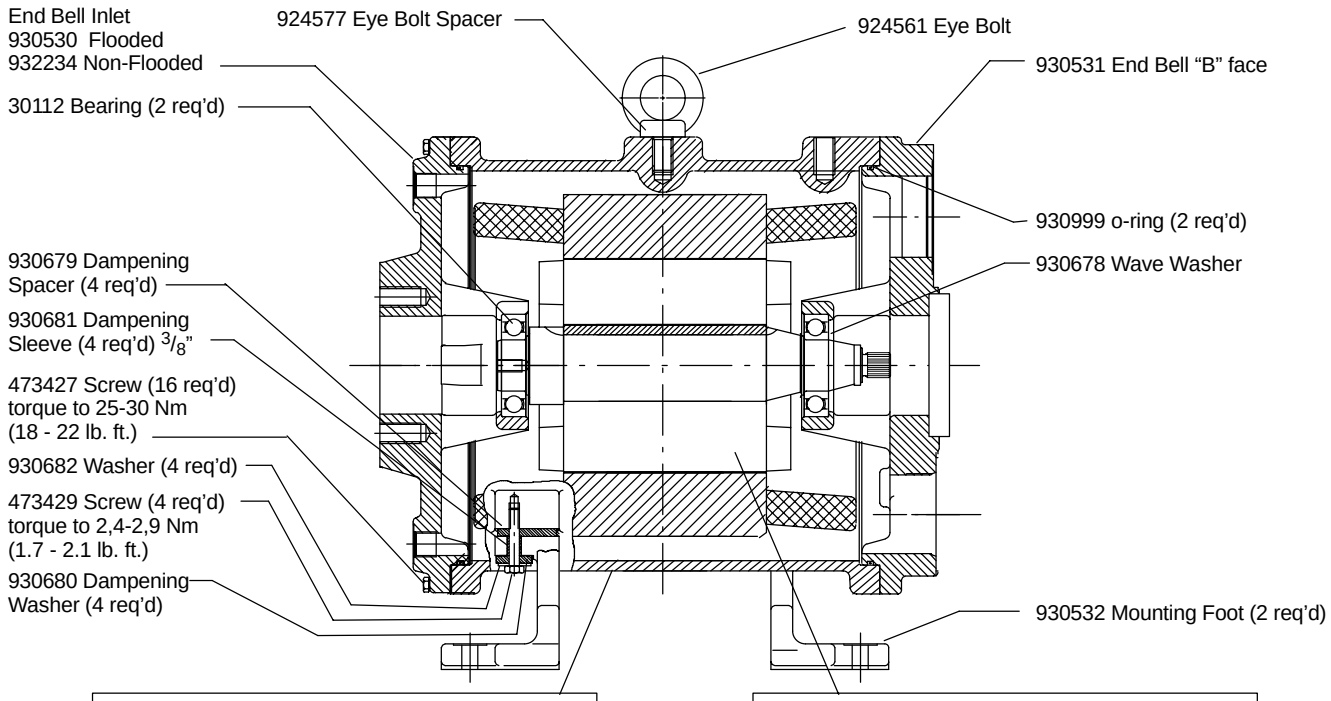

Housing & Stator S/A	
MP15	**MP22**
Standard Winding	
230VAC-60Hz 930551	230VAC-60Hz 930544
460VAC-60Hz 930551	460VAC-60Hz 930544
575VAC-50Hz 3001671	575VAC-50Hz 930895
380VAC-50Hz 3001723	380VAC-50Hz 3001731
400VAC-50Hz 3019504	400VAC-50Hz 3019307
Wye Delta Winding	
400VAC-50Hz 3019138	400VAC-50Hz 3001909
460VAC-60Hz 3019642	460VAC-60Hz 3019648
220VAC-60Hz 3019547	380VAC-50Hz 3019220
380VAC-60Hz 3019458	

Rotor, Shaft & Key S/A	
MP15	**MP22**
Standard Winding	
230VAC-60Hz 930555	230VAC-60Hz 930548
460VAC-60Hz 930555	460VAC-60Hz 930548
575VAC-60Hz 931023	575VAC-60Hz 931024
380VAC-50Hz 3001765	380VAC-50Hz 3001766
400VAC-50Hz 3019505	400VAC-50Hz 3019308
Wye Delta Winding	
400VAC-50Hz 3019139	400VAC-50Hz 3001907
460VAC-60Hz 3019643	460VAC-60Hz 3019649
220VAC-60Hz 3019548	380VAC-50Hz 3019221
380VAC-60Hz 3019459	

15 & 22 kW Electric Motor

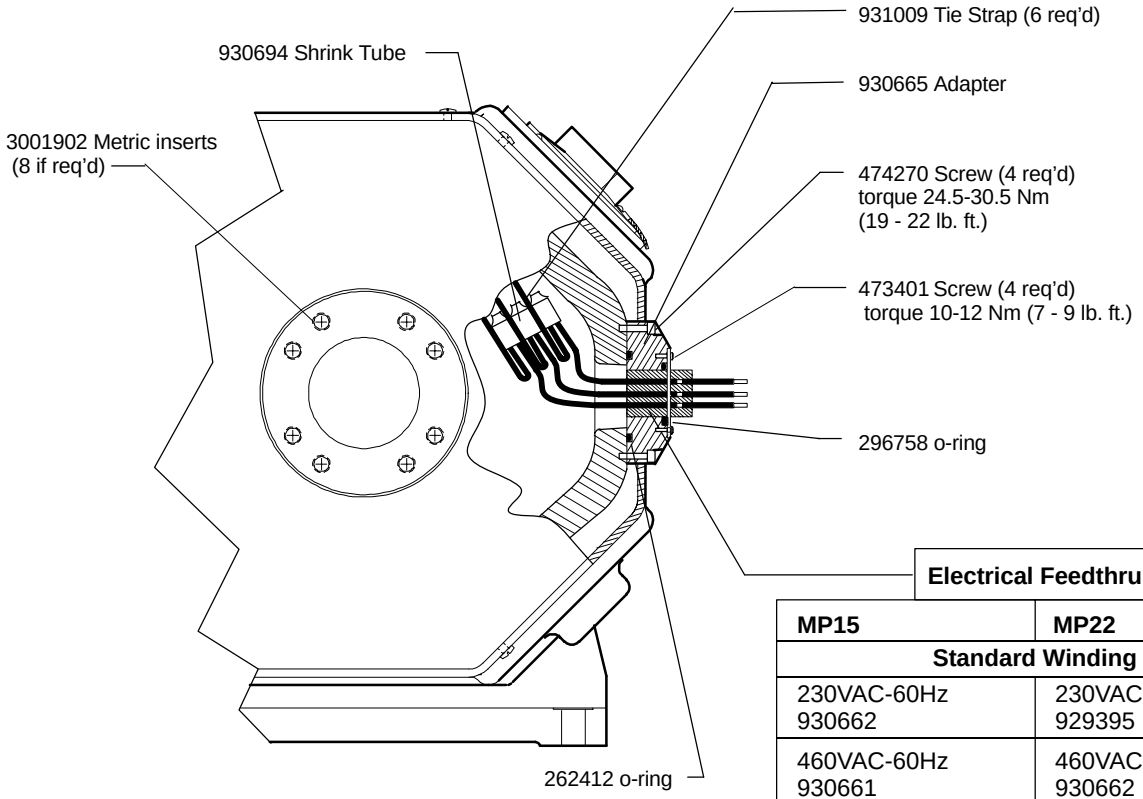

Electrical Feedthru

MP15	MP22
Standard Winding	
230VAC-60Hz 930662	230VAC-60Hz 929395
460VAC-60Hz 930661	460VAC-60Hz 930662
575VAC-60Hz 930661	575VAC-60Hz 930661
380VAC-50Hz 930662	380VAC-50Hz 930662
400VAC-50Hz 930662	400VAC-50Hz 930662
Wye Delta Winding	
400VAC-50Hz 3001904	400VAC-50Hz 3001904
380VAC-60Hz 3001904	380VAC-50Hz 3001904
460VAC-60Hz 3001904	460VAC-60Hz 3001904
220VAC-60Hz 3001905	

MP 15/22 Non-Flooded Inlet End Bell

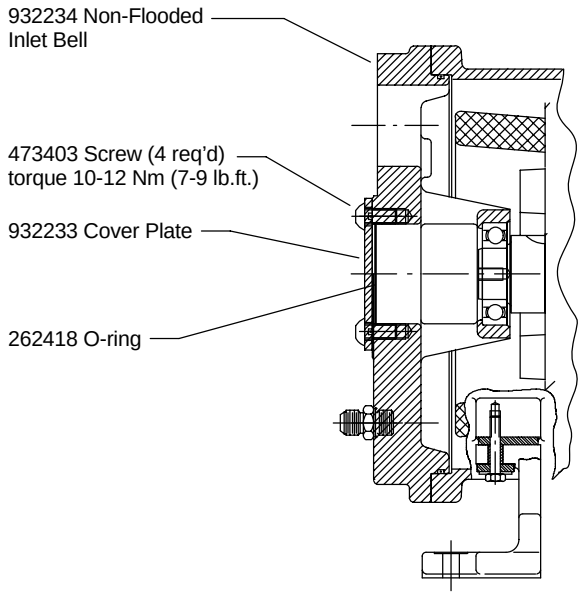

15 & 22 kW Integrated Motor Pump - Single Pump

Case Drain

Pump Type	Outlet Position	Part #
PVQ20 & 32	12 o'clock	930644
	3 o'clock	930645
	9 o'clock	930643
PVQ40 & 45	12 o'clock	930648
	3 & 9 o'clock	930647
PVH57	12 o'clock	930632
	3 & 9 o'clock	930631
PVH74	12 o'clock	930636
	3 & 9 o'clock	930635
PVH98	12 o'clock	930640
	3 & 9 o'clock	930639

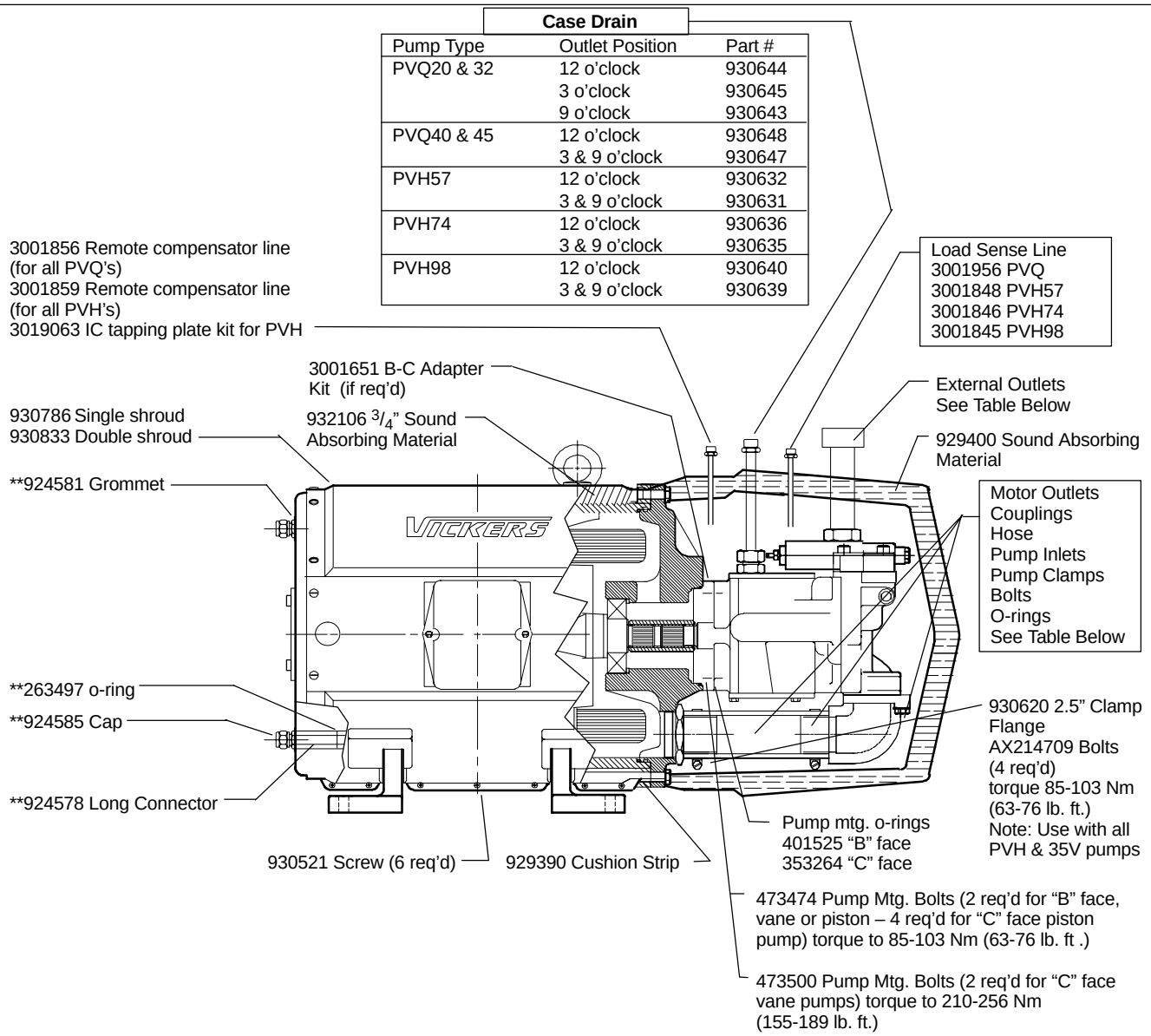

** 2 req'd, 1 req'd for non-flooded inlet.

Pump Type	Extension Outlet	O-ring	Bolts	Inlet Pump	O-ring	Bolts	Flange Clamp	Outlet Motor to Pump	O-ring	Splined Coupling	Hose (cut to length) I.D. (in.)	Part Number	Clamps (2 req'd)
PVQ20/32	930626	396107	N/A	930778	396107	N/A	N/A	930780	263502	584924	1.25"	930804	931004
PVQ40/45	930627	396105	N/A	930777	262502	N/A	N/A	930779	263502	584924	1.50"	930805	930870
PVH57	924554	262398	AX-1074	930621	262407	AX-199740	930622	930653	262411	877040	2.00"	930806	924582
PVH74	924554	262398	AX-1074	930621	262407	AX-199740	930622	930653	262411	877040	2.00"	930806	924582
PVH98	924554	262398	AX-1074	930619	262411	AX-214709	930620	930653	262411	877040	2.00"	930806	924582
20V	930887	262393	AX-1074	930781	263502 262404		N/A	930779	263502	584924	1.50"	930805	930870
25V	924554	262398	AX-1074	930781	262404 263502		N/A	930779	263502	584924	1.50"	930805	930870
35V	929384	262401	298150	930621	262407	AX-199740	930622	930653	262411	877040	2.00"	930806	924582

15 & 22 kW Integrated Motor Pump

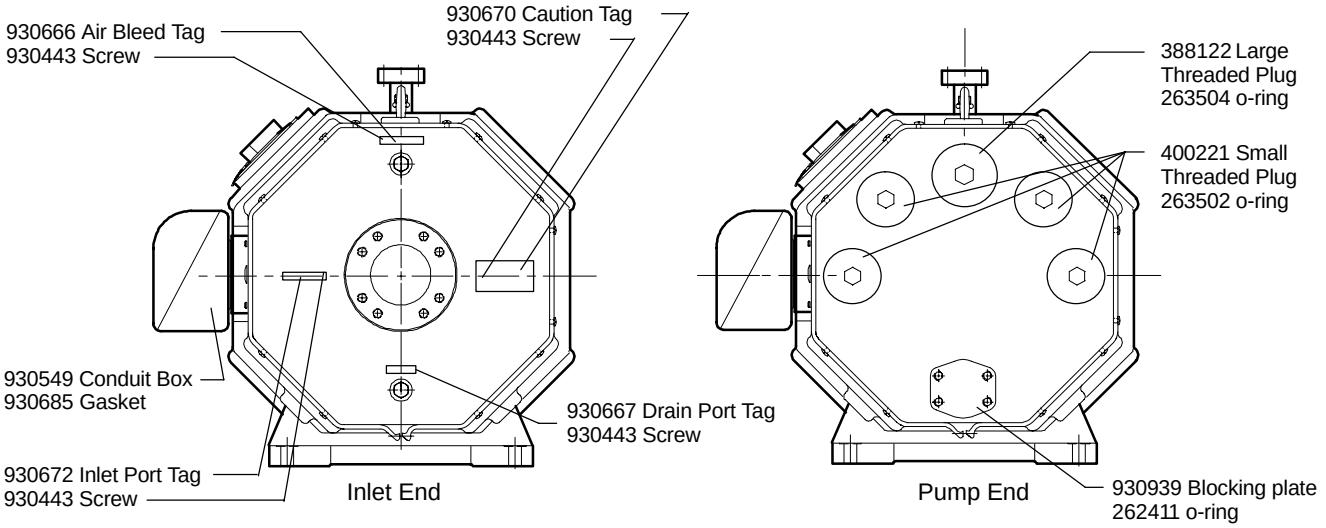

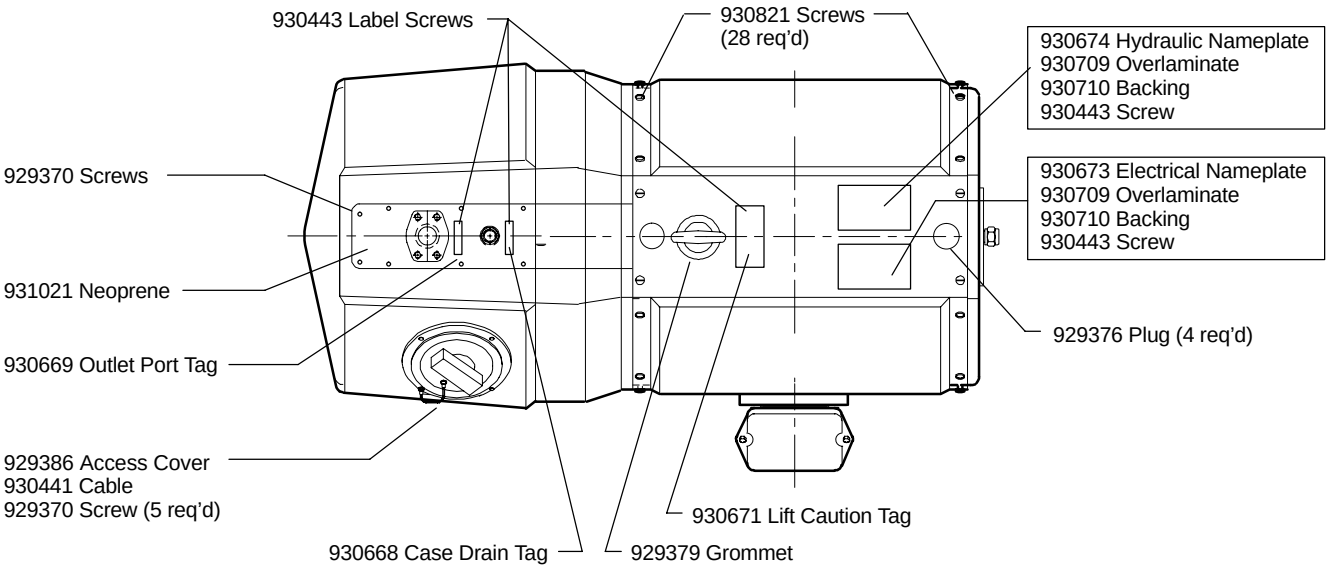

45 kW Electric Motor

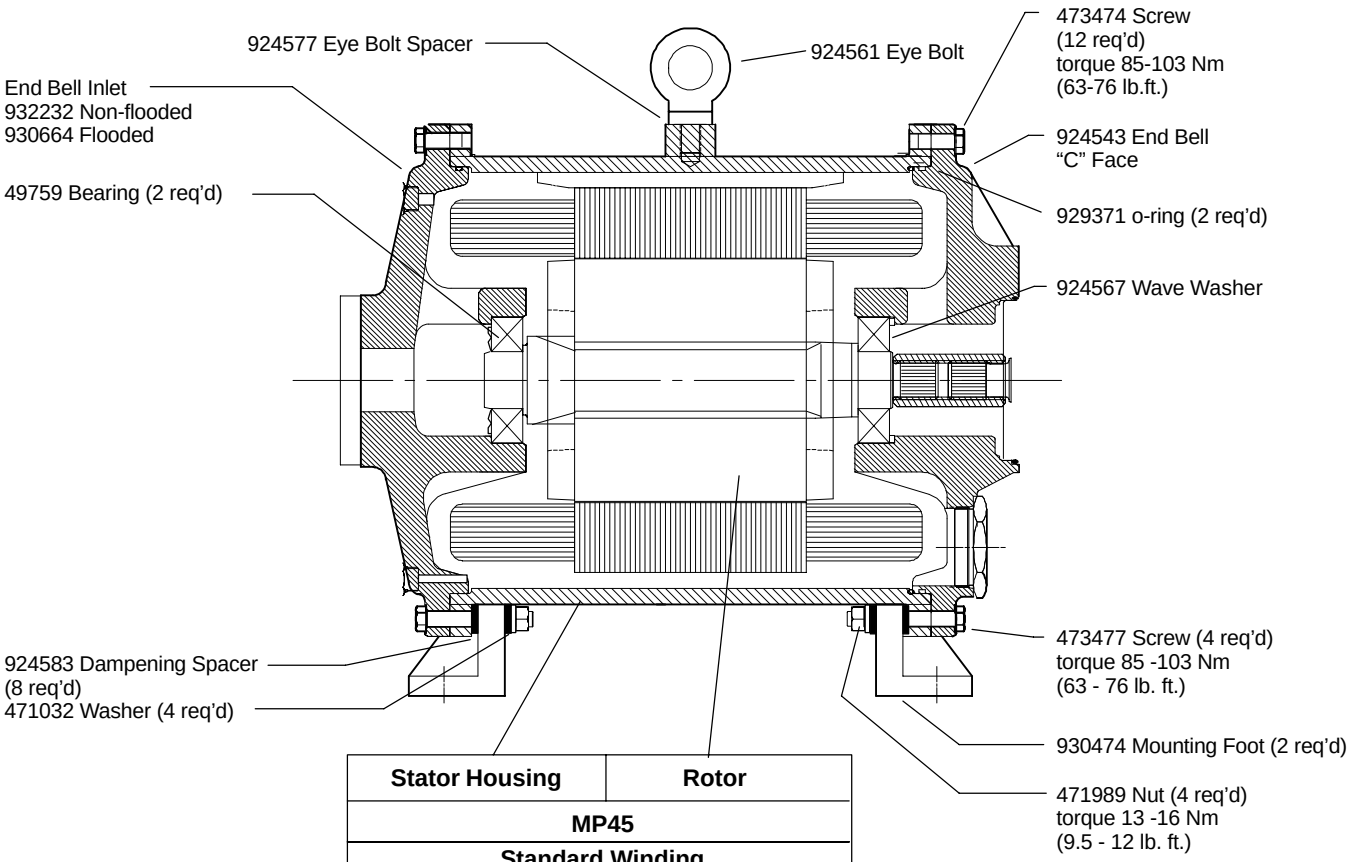

Stator Housing	Rotor
MP45	
Standard Winding	
208VAC-60Hz 3019278	208VAC-60Hz 3019279
220VAC-60Hz 3001970	220VAC-60Hz 3001971
230VAC-60Hz 3019034	230VAC-60Hz 3019035
460VAC-60Hz 930478	460VAC-60Hz 924558
575VAC-50Hz 930834	575VAC-50Hz 931025
380VAC-50Hz 3001733	380VAC-50Hz 931043
380VAC-60Hz 3001747	380VAC-60Hz 3001764
400VAC-50Hz 3019409	400VAC-50Hz 3019410
Wye Delta Winding	
230VAC-50Hz 3019623	230VAC-50Hz 3019624
380VAC-60Hz 3019512	380VAC-50Hz 3001929
380VAC-50Hz 3001931	380VAC-60Hz 3019513
400VAC-50Hz 3001913	400VAC-50Hz 3001911
500VAC-50Hz 3019196	500VAC-50Hz 3019197
575VAC-60Hz 3001559	575VAC-60Hz 3001560

45 kW Electric Motor

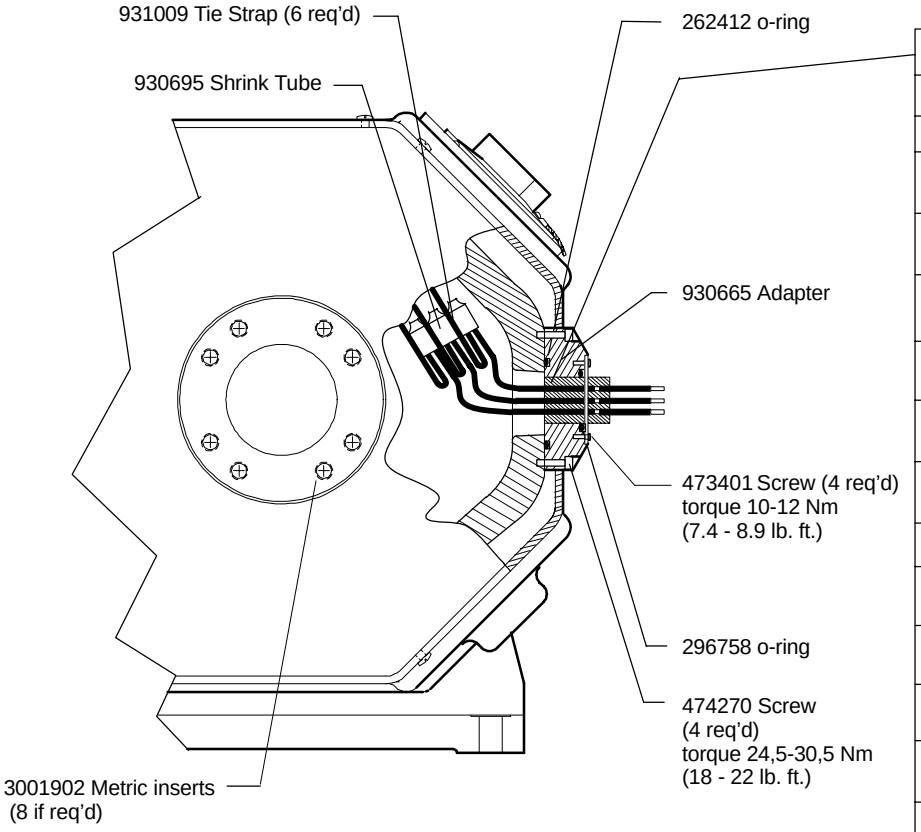

Electrical Feedthru
MP45
Standard Winding
208VAC-60Hz 930923
220VAC-60Hz 930923
230VAC-60Hz 930923
460VAC-60Hz 929395
575VAC-60Hz 929395
400VAC-50Hz 930924
Wye Delta Winding
230VAC-50Hz 3001686
380VAC-50Hz 3001905
400VAC-50Hz 3001905
500VAC-50Hz 3001905
380VAC-60Hz 3001905
575VAC-60Hz 3001905

MP45 Non-Flooded Inlet End Bell

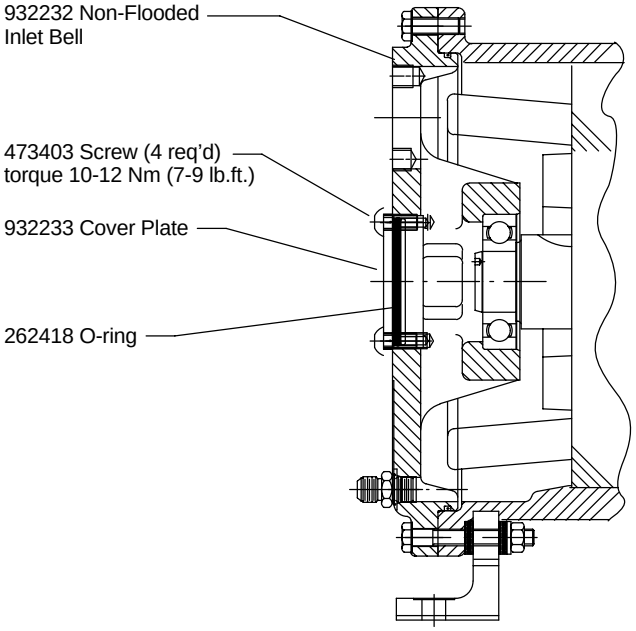

45 kW Integrated Motor Pump - Single Pump

Pump Type	Case Drain Outlet Position	Part #	Load Sense Control
PVH57	12 o'clock	939632	3001848
	3 & 9 o'clock	930631	
PVH74	12 o'clock	930636	3001846
	3 & 9 o'clock	930635	
PVH98	12 o'clock	930640	3001845
	3 & 9 o'clock	930639	
PVH131	12 o'clock	930947	
	3 o'clock	932217	3001842
	9 o'clock	932218	

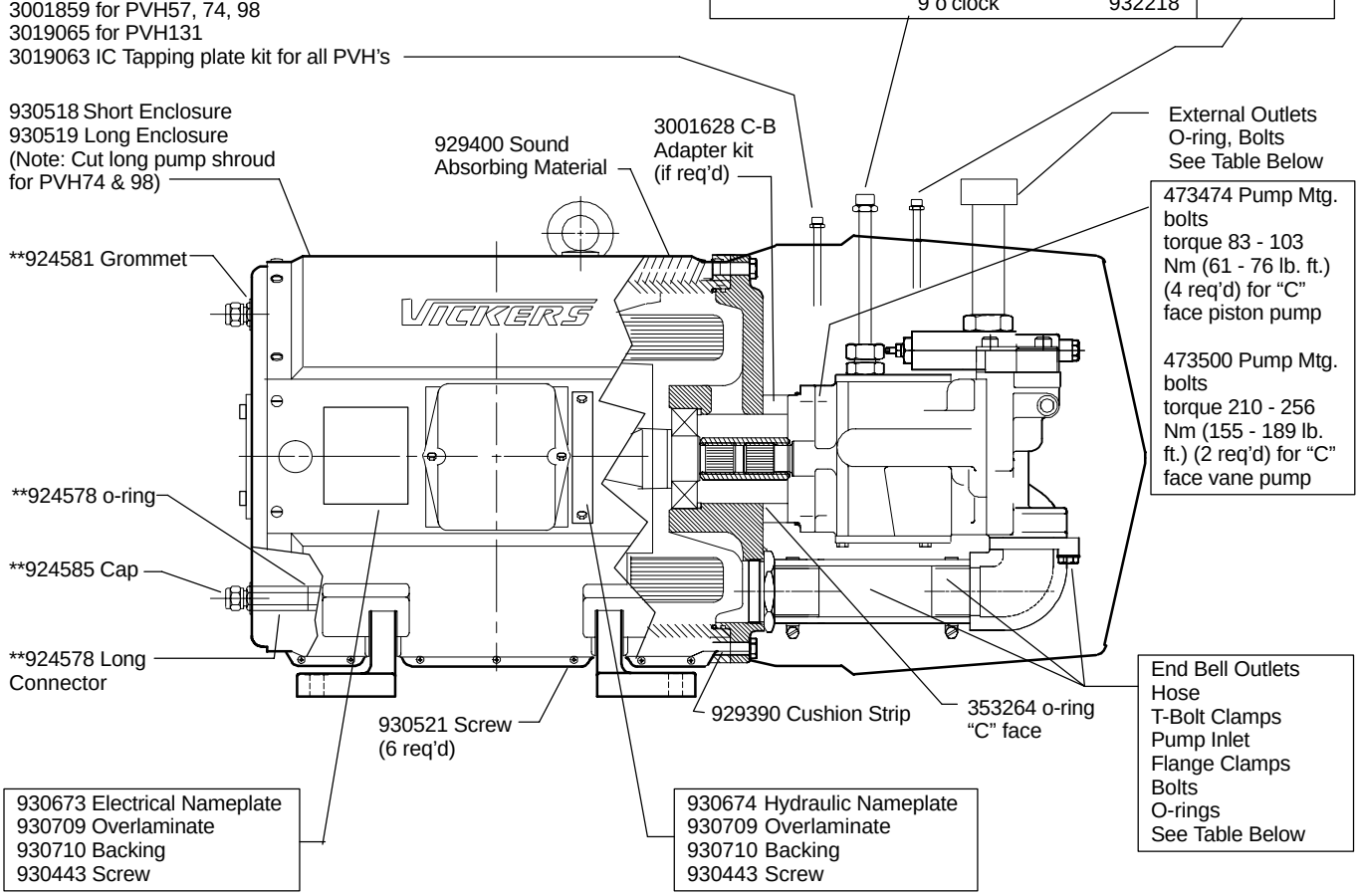

** 2 req'd, 1 req'd for non-flooded inlet.

Pump Type	Extension Outlet	O-ring	Bolts	Inlet Pump	O-ring	Bolts	Flange Clamp	Outlet Motor to Pump	O-ring	Hose	Hose Clamp (2 req'd)	Splined Coupling
PVH57	924554	262398	AX-1074	930621	262407	AX-199740	930622	924562	263504	930806	924582	877045
PVH74	924554	262398	AX-1074	930621	262407	AX-199740	930622	924562	263504	930806	924582	877045
PVH98	924554	262398	AX-1074	930619	262411	AX-214709	930620	924562	263504	930806	924582	877045
35V	929384	262401	298150	3019111	262407	AX-199740	930622	924562	263504	930906	924582	877045
45V*	930945	262404	AX-10955	930730 930777 (2) 930782	262416 263502 (2) 263504	AX-298171	N/A	930782 (3)	263504 (3)	930805 (3)	930870 (6 req'd)	3019095
PVH131*	930946	262401	AX-10955	930957	262411	AX-214709	930620	932107	263504	930807	930933	877046

* See expanded shroud parts for mounting a PVH131 or 45V on a MP45 electric motor.

45 kW Integrated Motor Pump

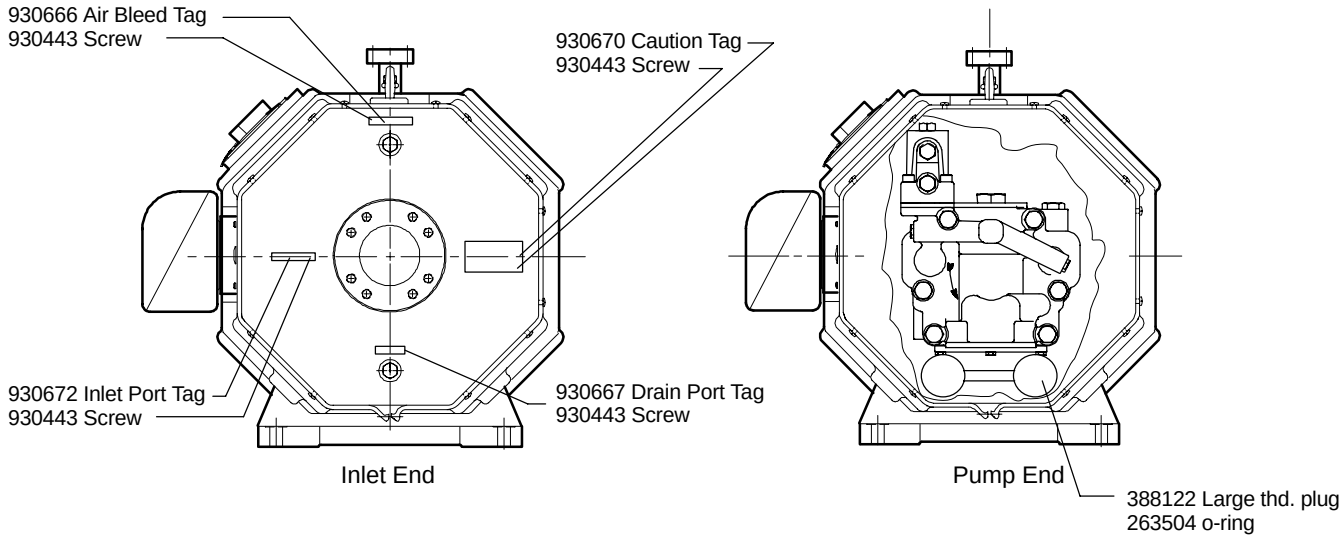

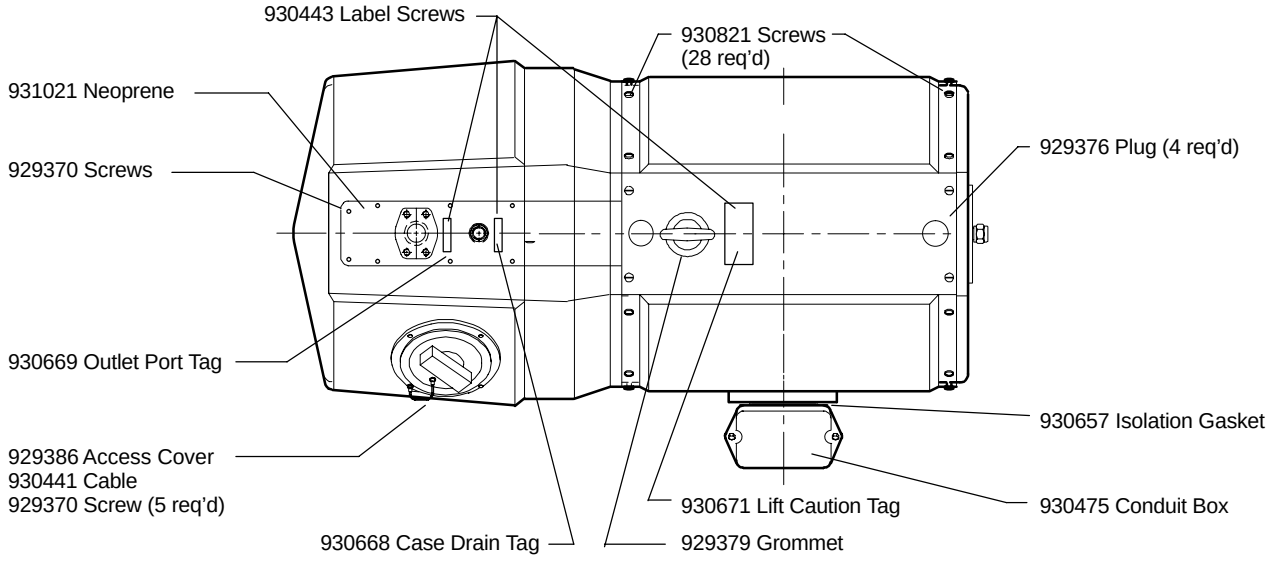

45 kW Integrated Motor Pump Expanded Shroud

For Mounting a PVH131 or 45V with a MP45 Electric Motor

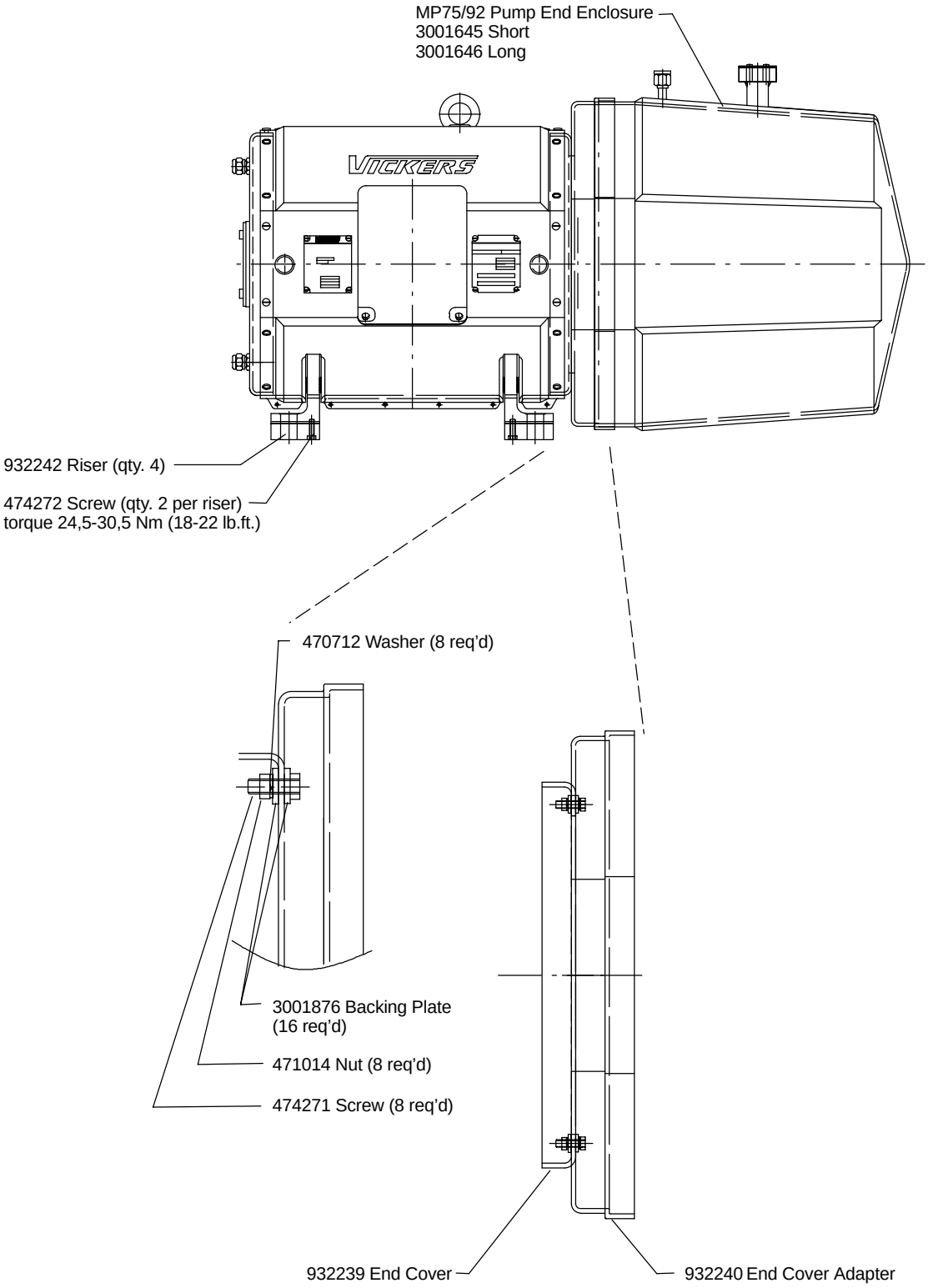

75 & 92 kW Electric Motor

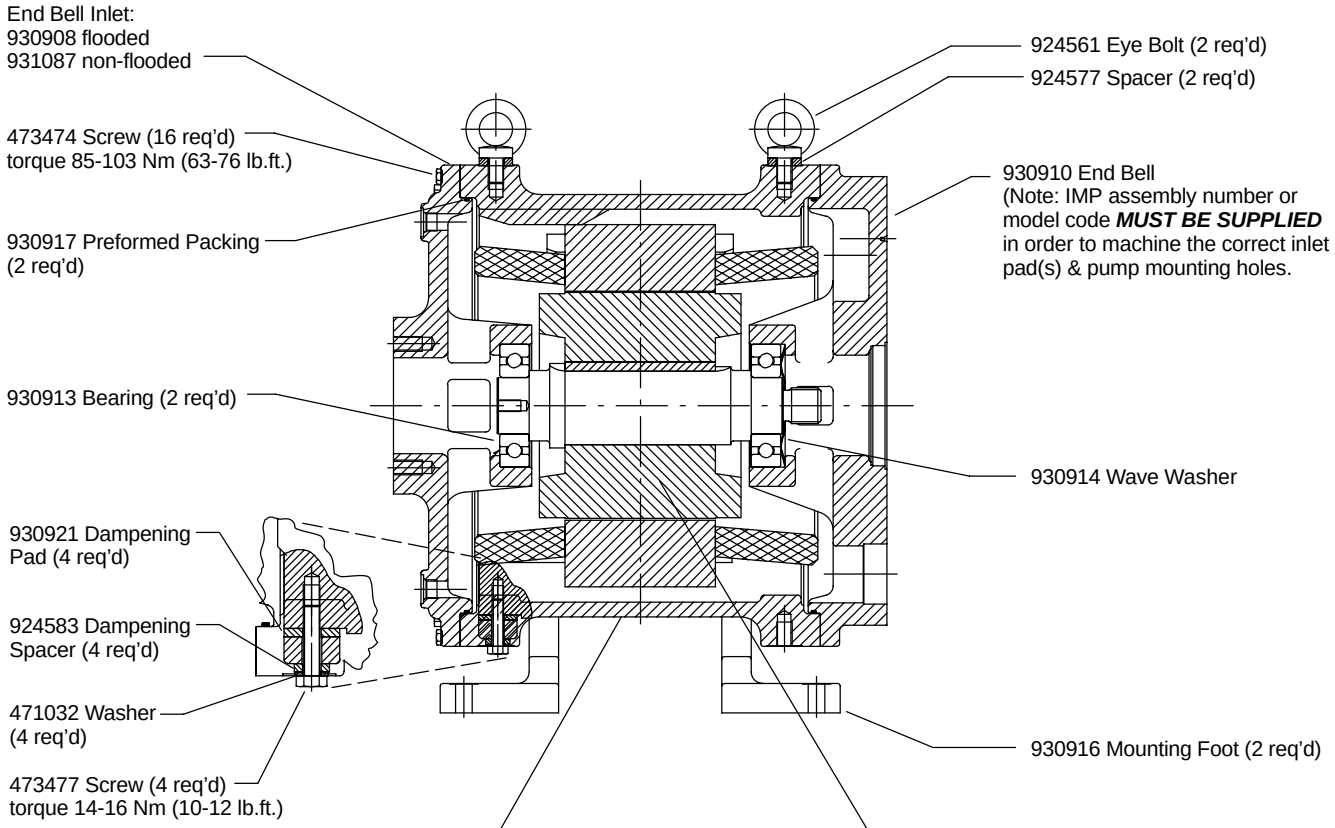

Stator Housing	
MP75	**MP92**
Standard Winding	
460VAC-60Hz 3001621	460VAC-60Hz 3001634
575VAC-60Hz 3001678	575VAC-60Hz 3001679
380VAC-50Hz 3001735	380VAC-50Hz 3001737
220VAC-60Hz 3001975	
Wye Delta Winding	
380VAC-60Hz 3019164	460VAC-60Hz 3001690
400VAC-50Hz 3019595	380VAC-50Hz 3001888
	400VAC-50Hz 3019045

Rotor	
MP75	**MP92**
Standard Winding	
460VAC-60Hz 3001620	460VAC-60Hz 3001635
575VAC-60Hz 931026	575VAC-60Hz 931027
380VAC-50Hz 3001767	380VAC-50Hz 3001768
220VAC-60Hz 3001976	
Wye Delta Winding	
380VAC-60Hz 3019165	460VAC-60Hz 3001809
400VAC-50Hz 3019596	380VAC-50Hz 3001889
	400VAC-50Hz 3019046

75 & 92 kW Electric Motor

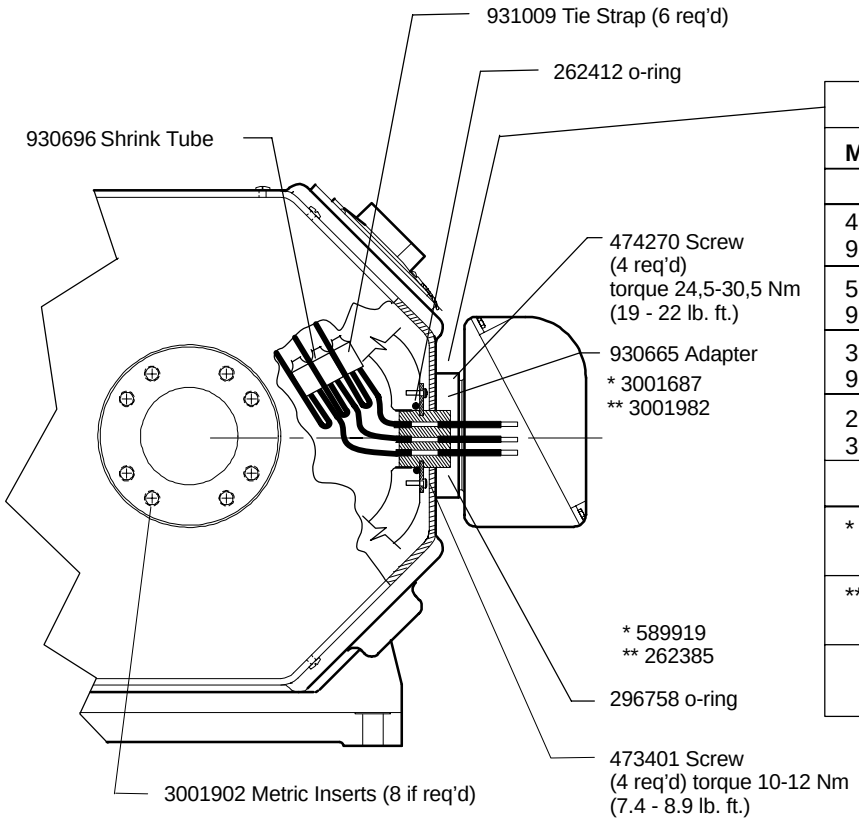

Electrical Feedthru	
MP75	**MP92**
Standard Winding	
460VAC-60Hz 930924	460VAC-60Hz 930923
575VAC-60Hz 930924	575VAC-60Hz 930923
380VAC-50Hz 930923	380VAC-50Hz 930923
220VAC-60Hz 3001978	
Wye Delta Winding	
* 380VAC-60Hz 3001686	* 460VAC-60Hz 3001686
**400VAC-50Hz 3001895	**380VAC-50Hz 3001895
	**400VAC-50Hz 3001895

MP75/92 Non-Flooded Inlet End Bell

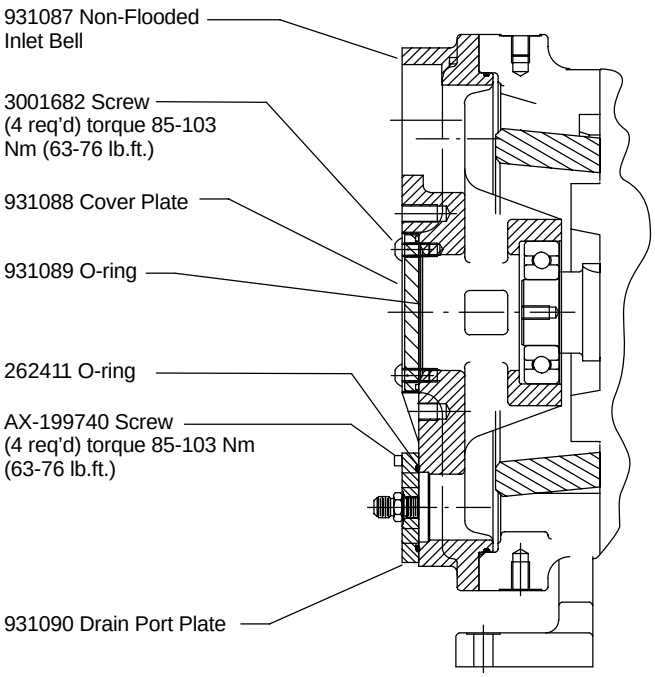

75 & 92 kW Integrated Motor Pump - Single Pump

Case Drain		
Pump Type	Outlet Position	Part #
PVH57	12 o'clock	932111
	3 & 9 o'clock	932212
PVH74	12 o'clock	932202
	3 & 9 o'clock	932203
PVH98	12 o'clock	932205
	3 o'clock	932206
	9 o'clock	932207
PVH131	12 o'clock	930947
	3 o'clock	932217
	9 o'clock	932217

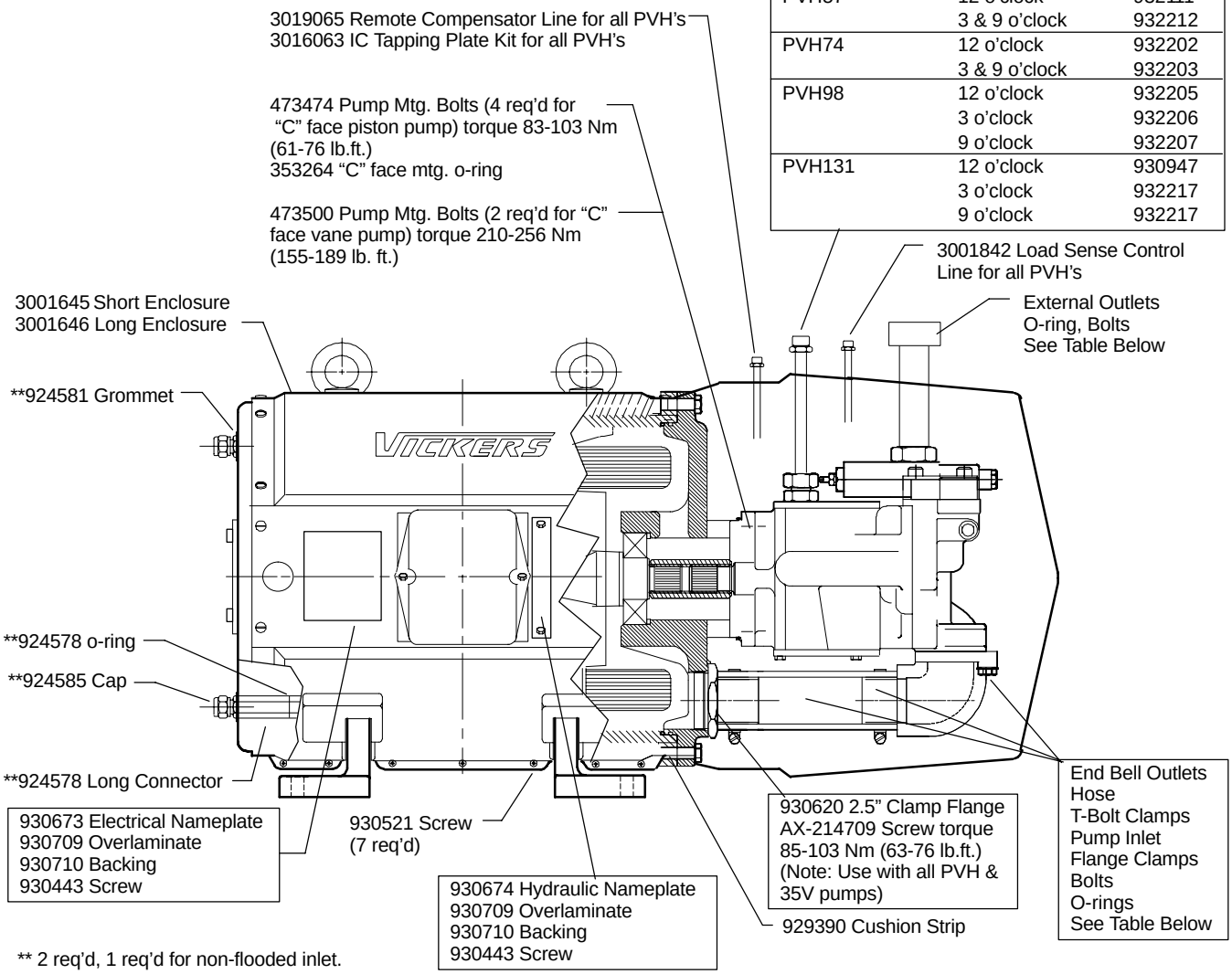

** 2 req'd, 1 req'd for non-flooded inlet.

Pump Type	Exten-sion Outlet	O-ring	Bolts	Inlet Pump	O-ring	Bolts	Flange Clamp	Outlet Motor to Pump	O-ring	Hose Clamp (qty 2)	Splined Coupling	Hose
PVH57	930949	262398	AX-1074	930962	262407	199740	930622	930960	262411	924582	930938	930806
PVH74	930949	262398	AX-1074	930961	262407	199740	930622	930960	262411	924582	930938	930806
PVH98	930949	262398	AX-1074	930941	262411	AX-214709	930620	930959	262411	930933	930938	930807
PVH131	930946	262401	AX-10955	930957	262411	AX-214709	930620	930959	262411	930933	930937	930807
35V	930944	262401	298150	930964	262407	AX-199740	930622	930963	262411	924582	930940	930806
45V	930945	262404	AX-10955	930973	262416	AX-214765	930971	930969*	262416	930972	930940	930808

* Use with 930971 clamp flange AX-214765 screw.

75 & 92 kW Integrated Motor Pump

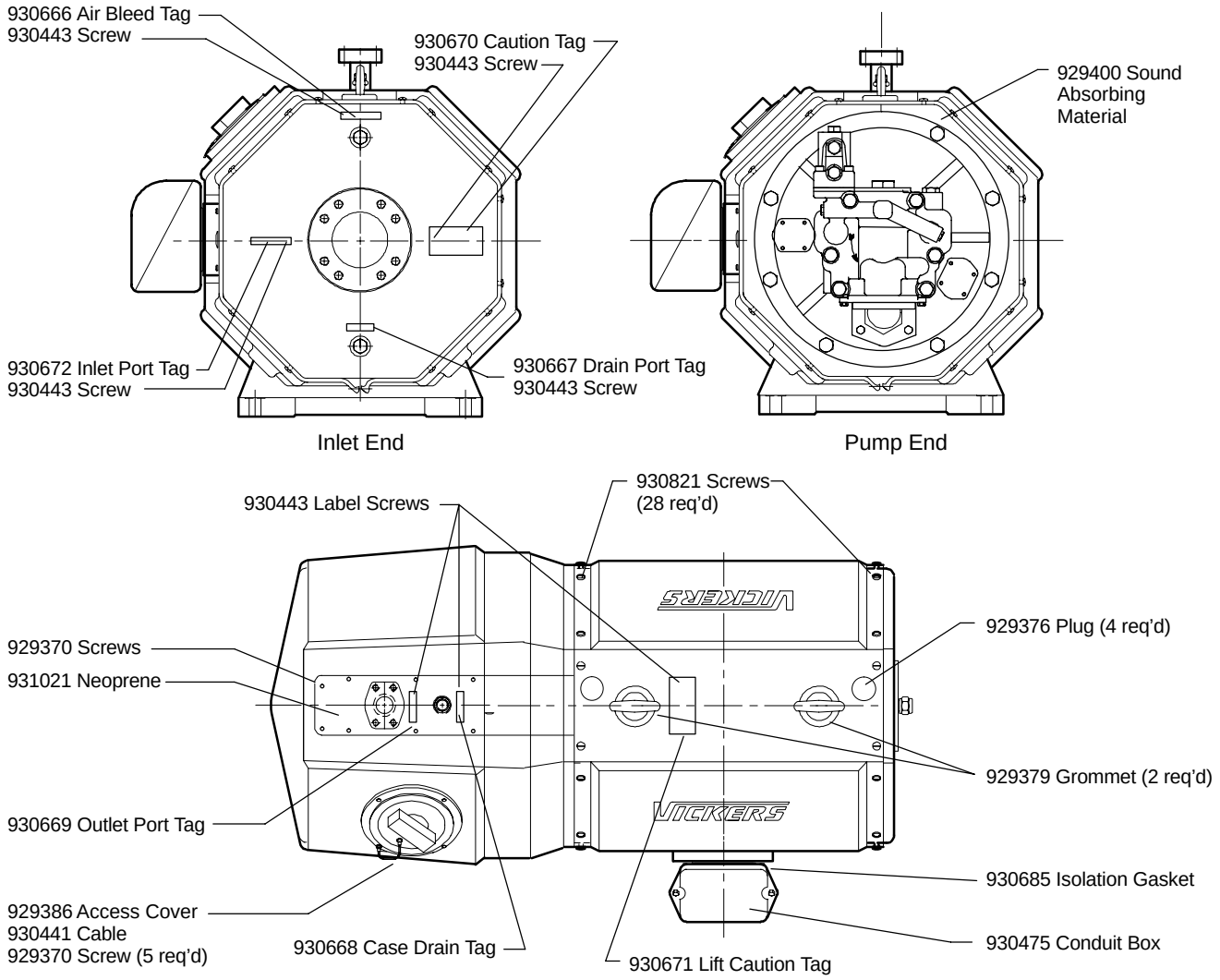

Rewinding Procedure for all Integrated Motor Pumps

1. Remove end bells, discard o-rings.
2. Remove rotor and wave washer.
3. Remove feed-thru and adaptor plate, discard the o-rings.
4. Remove the stator anti-rotation pin plugs, if so equipped, discard the o-rings.
5. The stator is not removed from the housing, treat them as a unit.
6. Heat in a furnace to 600° F for 6 hours, remove debris.
7. Shot blast stator with glass beads, do not use sand.
8. Clean with an air drying solvent, no water.
9. Replace adaptor plate and feed-thru using new o-rings, torque screws to specification.
10. Reline stator slots with no less than Class H insulators.
11. Use a standard rewind procedure with Class H insulation.
12. Hook up stator and feed-thru leads for proper operating voltage.
13. Braze leads with copper silver alloy rod (trade name Fluff copper) if available.
14. No additional flux, if possible, or crimps are used in the hook-up.
15. Clean, trim, and smooth out the joints.

16. Use glass filled tubing for insulation, do not use tape.

17. Lace connections to the butt winding with heat shrinking polyester ribbon.

18. High potential test voltages in accordance with NEMA MG1-13.03 Section B Induction Motors, and NEMA 1-3.01 Sections 3.01.6 and 3.01.12 must be followed.

19. The stator and housing must not be dipped in varnish.

20. To insulate the stator, use a pour-thru varnish, Dolph Corp. recommends CC 1049. Refer to their data sheet Dolphon CC 1049 Polyester Pour on Resin Kit Class H, for application information.

21. Reassemble the rotor, wave washer, and end bells with new o-ring and torque to specifications.

22. Bench test.

23. Torque specifications and hardware may be found in the overhaul and service parts literature.

24. Internal cleanliness is extremely important. Protect internal surfaces and rotation mechanism from debris and airborne dirt.

Supporting Literature

The following literature items can be ordered through your local Vickers Distributor.

- PVQ Piston Pumps #GB-C-2132
- PVQ Service Literature:
  Overhaul Manual, I-3230-S
  PVQ20/32 I-3233-S
  PVQ40/45 I-3234-S
- PVH Piston Pumps #GB-C-2010
- PVH Service Literature:
  Overhaul Manual, M-2210-S
  PVH57 M-2206-S
  PVH74 M-2207-S
  PVH98 M-2208-S
  PVH131 M-2209-S
- V-Series Vane Pumps #560
- Vane Pump Service Literature:
  Overhaul Manual, I-3157-S
  20V I-3195-S
  25V I-3196-S
  35V I-3197-S
  45V I-3199-S
  2520V I-3200-S
  2525V I-3212-S
  3520V I-3202-S
  3525V I-3203-S
  4520V I-3204-S
  4525V I-3208-S
  4535V I-3209-S
- Systemic Contamination Control #561
- Fluid Analysis Service #588
- Noise Control in Hydraulic Systems #510

Eaton
Fluid Power Group
Hydraulics Business USA
14615 Lone Oak Road
Eden Prairie, MN 55344
USA
Tel: 952-937-9800
Fax: 952-294-7722
www.eaton.com/hydraulics

Eaton
Fluid Power Group
Hydraulics Business Europe
Route de la Longeraie 7
1110 Morges
Switzerland
Tel: +41 (0) 21 811 4600
Fax: +41 (0) 21 811 4601

Eaton
Fluid Power Group
Hydraulics Business Asia Pacific
11th Floor Hong Kong New World Tower
300 Huaihai Zhong Road
Shanghai 200021
China
Tel: 86-21-6387-9988
Fax: 86-21-6335-3912

Powering Business Worldwide

© 2009 Eaton Corporation
All Rights Reserved
Printed in USA
Document No. V-POPO-TS002-E
Supersedes 5035.04/EN/0999/S
March 2009