Vickers

H Series Vickers Piston Pumps

Pressure & Flow Compensator Kit

Installation Information

PVH057 / 63
PVH074 / 81
PVH098 / 106
PVH131 / 141

For more detailed information contact EATON Hydraulics at one of the addresses listed below.

Please reference the following documents:

- For Specifications and Performance Data see Catalog No. GB-C-2010.
- For parts Information for the PVH Piston Pump refer to Service Data below.
- When servicing PVH Piston Pump Compensators refer to these Service Data documents:

PVH057 / 063	M-2206-S
PVH074 / 081	M-2207-S
PVH098 / 106	M-2208-S
PVH131 / 141	M-2209-S

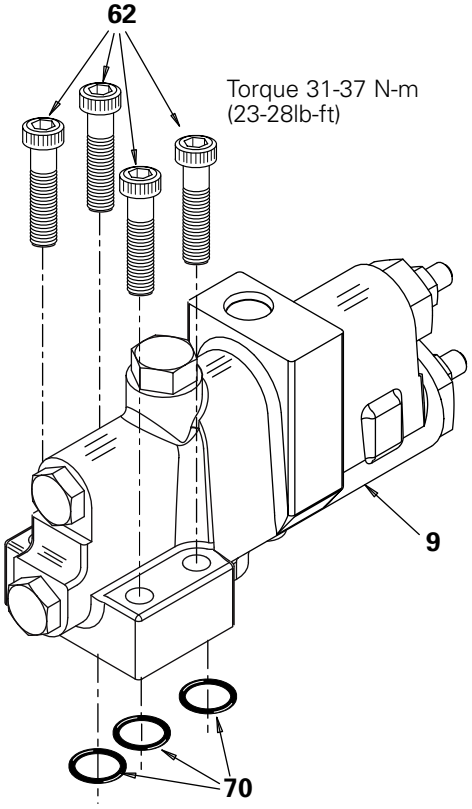

Pressure & Flow Compensator Parts

Model Code Feature (postion 14) = B, E, M, N

ITEM	DESCRIPTION	QTY
9	Pressure & Flow Compensator	1
62	Cap Screw	4
70	O-ring	3

⚠ WARNING

EATON recommends for positive displacement pumps that a relief valve be fitted between the pump and the load to protect against overload of the pump or system.

WARNING: NEVER ADJUST THE COMPENSATOR TO ALLOW THE PUMP OR THE HYDRAULIC SYSTEM TO EXCEED THEIR MAXIMUM RATED PRESSURES. REFER TO THE OPERATORS MANUAL FOR MAXIMUM PRESSURES OR CONTACT THE SUPPLIER.

EXCESSIVE PRESSURE MAY RESULT IN ABRUPT AND VERY SERIOUS FAILURES IN THE SYSTEM WHICH CAN CAUSE DEATH OR SERIOUS BODILY INJURY TO PERSONS NEARBY AND/OR DAMAGE THE PUMP.

Eaton
14615 Lone Oak Road
Eden Prairie, MN 55344
USA
Tel: 952 937-9800
Fax: 952 974-7722
www.hydraulics.eaton.com

Eaton
20 Rosamond Road
Footscray
Victoria 3011
Australia
Tel: (61) 3 9319 8222
Fax: (61) 3 9318 5714

Eaton
Dr. Reckeweg-Str. 1
D-76532 Baden-Baden
Germany
Tel: (49) 7221 682-0
Fax: (49) 7221 682-788

© 2004 Eaton Corporation
All Rights Reserved

Printed in USA
Document No. V-PUPI-TI005-E
May 2004