**Eaton®**

Medium Duty Piston Pump

No. 6-617
January 1998

# Parts and Repair Information

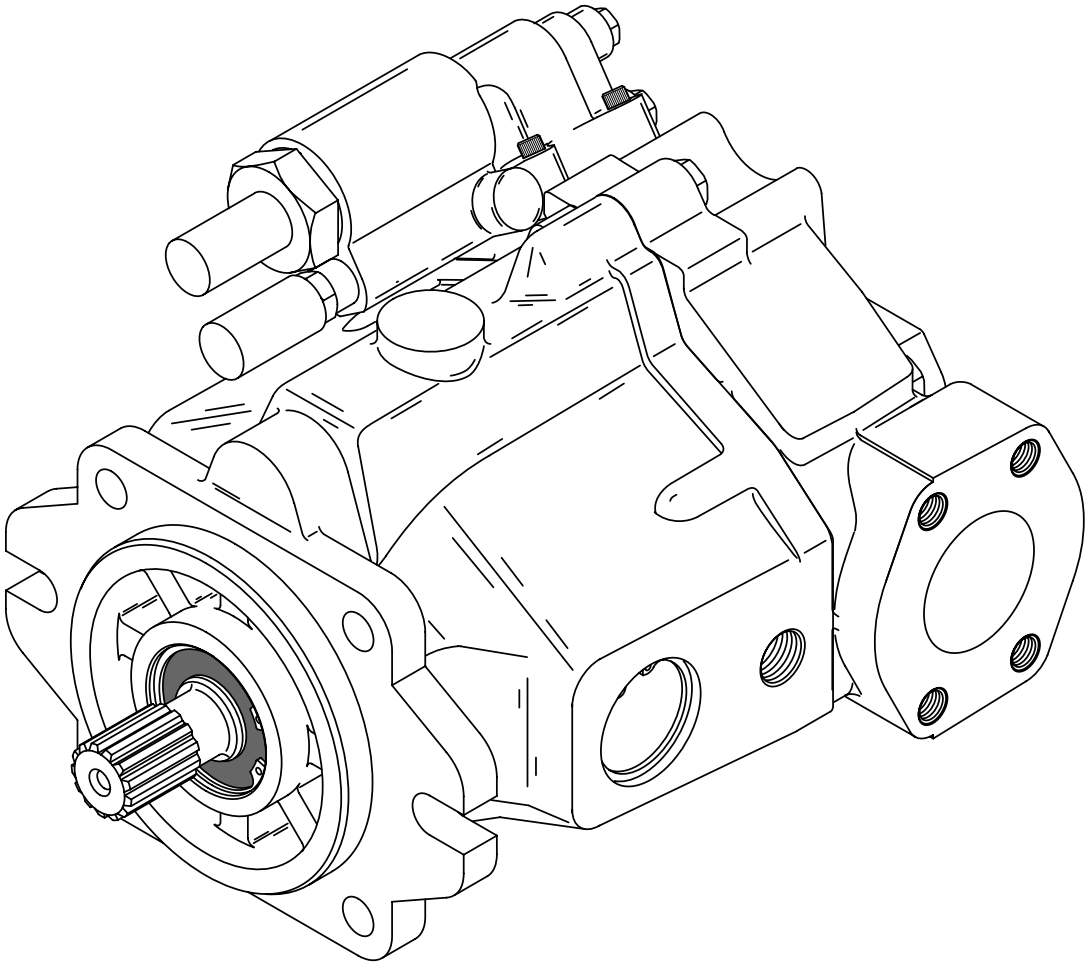

**Model 70523 or 70553,** 0 -69 $cm^3/r$ [0-4.21 $in^3/r$] Displacement

**Pressure or Pressure-Flow Compensated Piston Pumps**

# Introduction

## Table of Contents


Introduction ..... 2
Identification ..... 3
Tools Required ..... 3
Parts Drawing ..... 4
Parts List ..... 5 - 12
- Item 1 - Drive Shaft ID ..... 6
- item 2 - Backplate Assembly ..... 7
- Item 4 - Compensator Assembly and Parts List ..... 8 - 9
- Factory Pre-set Compensator Assemblies ..... 9
- Item 3 - Housing Identification ..... 10
- Item 5 - Rotating Kit ..... 10
- Mounting Kits ..... 11
- Product Number ..... 12

Repair information ..... 13 - 15
- Disassembly ..... 13
- Inspection ..... 14
- Reassembly ..... 14 - 15

Start-up Procedure ..... 16
Fault - Logic Troubleshooting ..... 17 - 19


## Introduction

This manual provides service information for the Eaton Models 70523 Pressure or Pressure - Flow Compensated Piston Pumps. Step by step instructions for the complete disassembly, inspection, and reassembly of the pump are given. The following recommendations should be followed to insure successful repairs.

- Remove the pump from the application.
- Cleanliness is extremely important.
- Clean the port areas thoroughly before disconnecting the hydraulic lines.
- Plug the pump ports and cover the open hydraulic lines immediately after they're disconnected.
- Drain the oil and clean the exterior of the pump before making repairs.
- Wash all metal parts in clean solvent.
- Use compressed air to dry the parts. Do not wipe them dry with paper towels or cloth.
- The compressed air should be filtered and moisture free.
- Always use new seals when reassembling hydraulic pumps.
- Lubricate the new rubber seals with a petroleum jelly (Vaseline) before installation.
- Torque all bolts over gasketed joints, then repeat the torquing sequence to make-up for gasket compression.
- Verifying the accuracy of pump repairs on an authorized test stand is essential.

# Identification and Tools Required

**Identification Numbers - Pressure or Pressure-Flow Compensated Piston Pump**

Stamped on each units mounting flange.

A - Product Number Description
- 70523 = Single Piston Pump
- 70553 = Single Piston Pump, w/ Aux. Flange

B - Rotation
- L - Left Hand (CCW)
- R - Right Hand (CW)

C - Sequential Numbering

**Single Pump -** Product Number:

**70523 - RAA**

A B C

**Serial Number Code:**

**B 93 01 31 JB**

- Revision level of parts list.
- Last two digits of year built. ( 93 for 1993 etc.)
- Month (two digits)
- Day of Month (two digits)
- Testers Initials

**Serial Number Code prior to Jan., 1992:**

**1 B- 52-JB**

- Year Manufactured (1 for 1991 etc.)
- Change Code
- Week of Year
- Testers Initials

## Tools Required

- 3/8 Inch Socket
- 9/16 Inch End Wrench
- 1-1/2 Inch End Wrench
- 11/16 Inch End Wrench
- Rachet Wrench
- Torque Wrench (100 lb./ft.)
- 3/16 Inch Hex Key (Allen)
- 3/16 Inch Hex Key (Allen Socket)
- Soft Face Hammer
- Internal Retaining Pliers (Straight .070 Tip)
- External Retaining Pliers (Straight .070 Tip)
- Regular or Locking Pliers
- Seal Driver or Similar Tool
- Petroleum Jelly (Such as Vaseline)
- 1/2 inch I.D. x 1-3/8 inch O.D. flat washer (2 ea.)
- 5/8 inch I.D. x 1-3/4 inch O.D. flat washer (1 ea.)
- 1/2 inch x 4-1/2 inch N.C. Cap screw (1 ea.)
- 1/2 inch N.C. Nut

# Parts Drawing

Pump drawn below is typical of a righthand (CW) rotation pump.

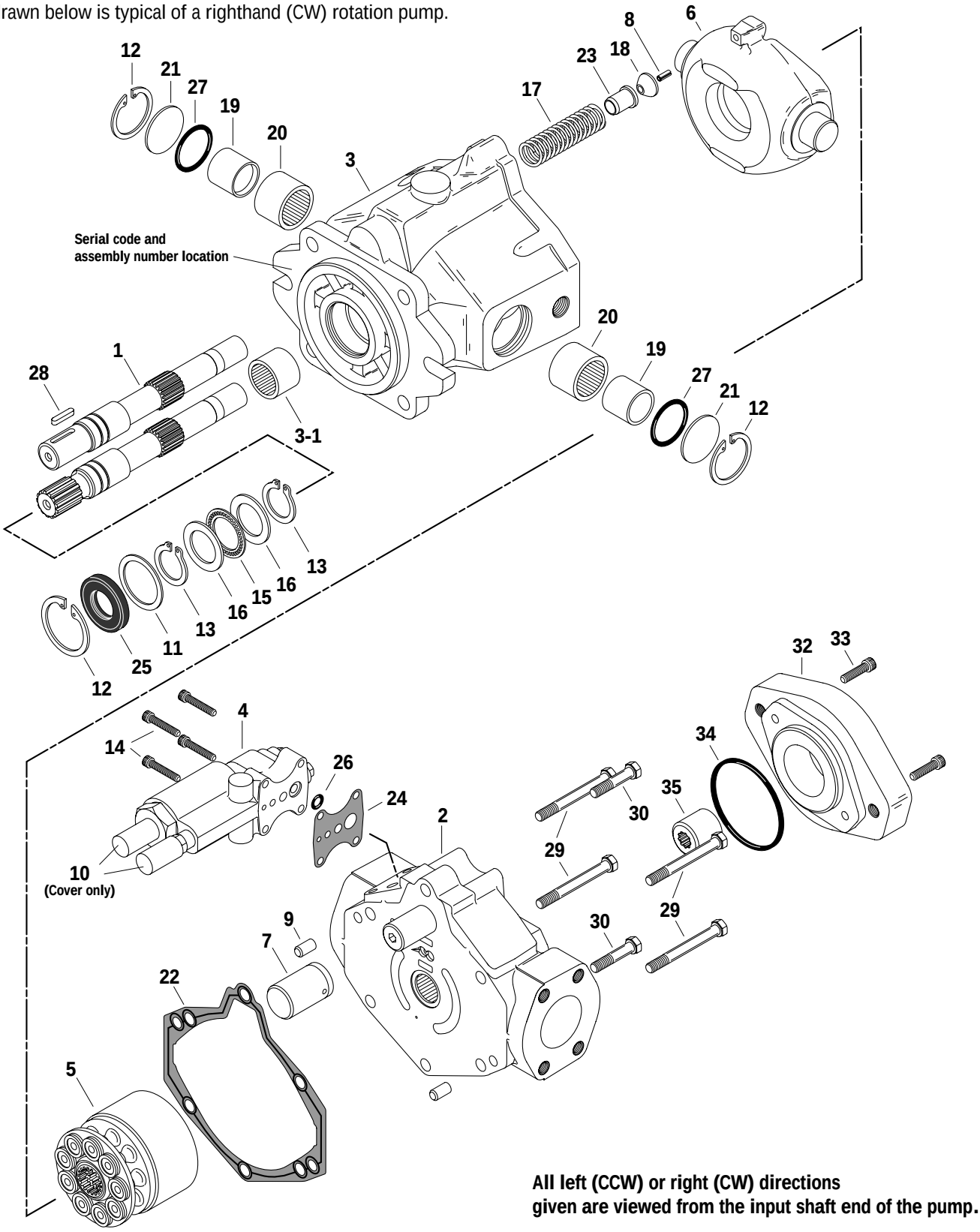


**All left (CCW) or right (CW) directions given are viewed from the input shaft end of the pump.**

# Parts List

| | Item | Part No. | Qty. | Description |
|---|---|---|---|---|
| | 1 | ♦ | 1 | Drive Shaft (Identification drawing on page #6) |
| | 2 | ♦ | 1 | Backplate Assembly (Identification drawing on page #7) |
| | 3 | ♦ | 1 | Housing Assembly (Identification drawing on page #10) |
| | 3-1 | 77010-9 | 1 | Bearing |
| | 4 | ♦ | 1 | Compensator Assembly (Identification drawing on page #8 & 9) |
| | 5 | ♦ | 1 | Rotating Kit Assembly (Parts list on page #10) |
| | 6 | 70523-605 | 1 | Camplate |
| | 7 | 70523-423 | 1 | Control Piston |
| | 8 | 16026-608 | 1 | Roll Pin |
| | 9 | 16028-604 | 2 | Dowel Pin |
| | 10 | 70523-618 | 2 | Cover |
| | 11 | 16048-329 | 1 | Washer |
| + | 12 | 16077-34 | 3 | Retaining Ring |
| + | 13 | 16078-22 | 2 | Retaining Ring |
| | 14 | 16147-412 | 4 | Cap Screw |
| | 15 | 16241-2233 | 1 | Thrust Bearing |
| | 16 | 16241-C2233 | 2 | Thrust Bearing Race |
| | 17 | 17091-12 | 1 | Spring |
| | 18 | 70420-35 | 1 | Pivot Button |
| | 19 | 70500-100 | 2 | Inner Race |
| | 20 | 70500-101 | 2 | Thrust Bearing |
| | 21 | 70500-600 | 2 | Trunnion Cover |
| + | 22 | 70500-604 | 1 | Gasket |
| | 23 | 70523-400 | 1 | Spring Collar |
| + | 24 | 70523-610 | 1 | Gasket |
| + | 25 | 16232-22 | 1 | Shaft Seal |
| | 25 | 16233-22 | 1 | Shaft Seal, Drive (fluorocarbon rubber) |
| + | 26 | 16003-408-90 | 1 | O-ring, 2.38 mm Dia. x 9.525 mm ID. [.0937 in. Dia. x .375 in. ID.] |
| + | 27 | 16004-3 | 2 | O-ring, 3.175 mm Dia. x 47.625 mm ID. [.125 in. Dia. x 1.875 in. ID.] |
| | 27 | 16004-403 | 2 | O-ring, 3.175 mm Dia. x 47.625 mm ID. [.125 in. Dia. x 1.875 in. ID.] (fluorocarbon) |
| | 28 | 16246-612 | 1 | Key, Used on 31.75 [1.25] diameter shaft |
| | 29 | 16032-734 | 4 | Cap Screw |
| | 30 | 16032-720 | 2 | Cap Screw |
| | 32 | 70400-646 | 1 | Mount Adapter, SAE "A" to "B" flange |
| | 33 | 16147-610 | 2 | Cap Screw |
| | 34 | 16007-14 | 1 | O-ring, (In K2 & K3 kit) |
| | 35 | 70411-617 | 1 | Coupler, for 9 tooth spline |
| | 35 | 70411-604 | 1 | Coupler, for 13 tooth spline |

## Mounting Kits (Drawings and parts list on Page #11)

| | | | |
|---|---|---|---|
| K2 | 70442-929 | 1 | Gear Pump Mounting Kit |
| K3 | 70142-915 | 1 | Cover Plate Kit, (for "A" SAE flange) |
| K6 | 990596-000 | 1 | Cover Plate Kit, (for "B" SAE flange) |

## Seal Repair Kit

| | | | |
|---|---|---|---|
| • | 70523-900 | 1 | Seal Repair Kit |

**Legend**

♦ Refer to specific item parts list.
\+ Included in seal repair kits listed.

# Item 1 - Drive Shaft Identification

## Item 1

Drive Shaft Identification

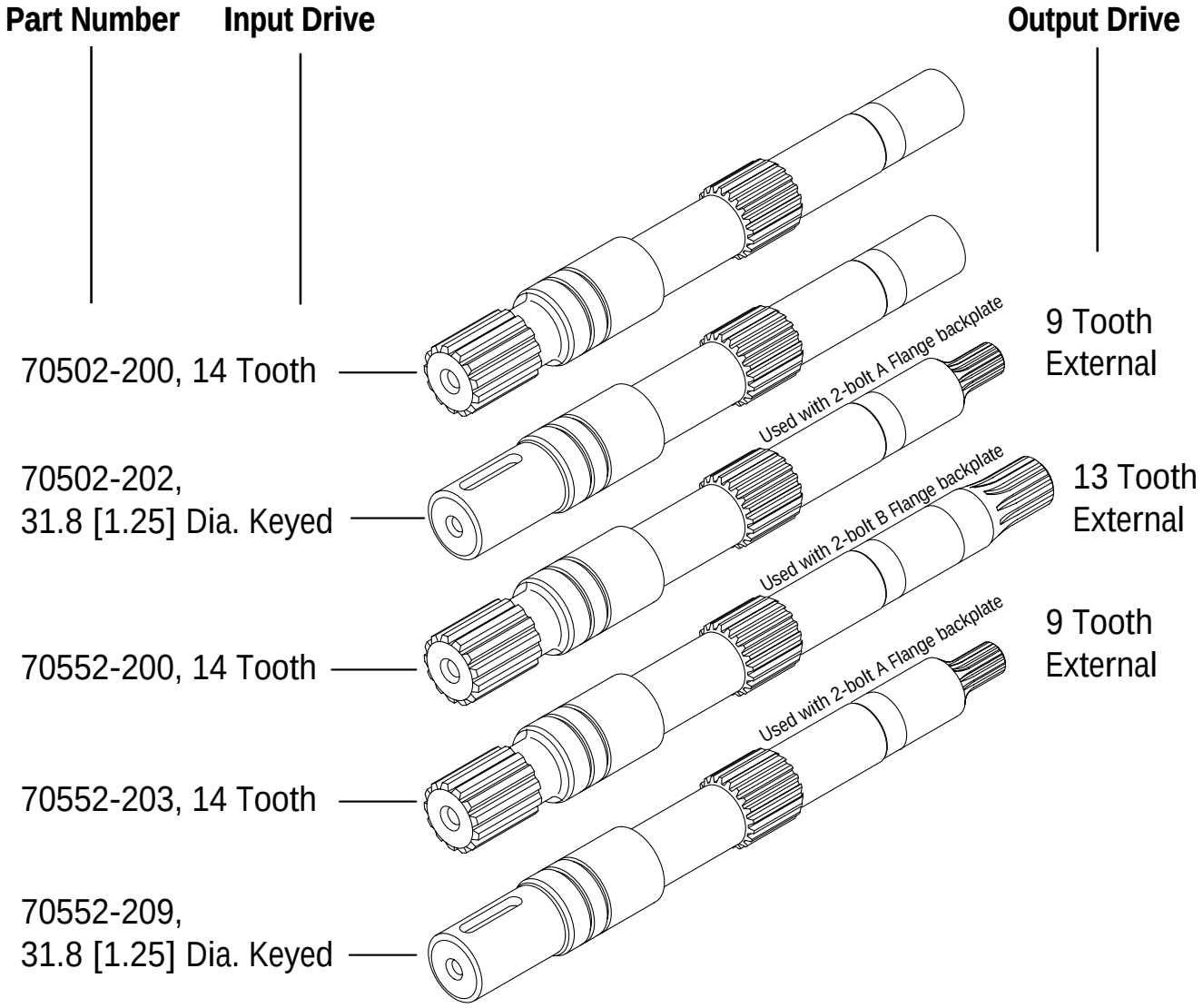

# Item 2 - Backplate Assembly

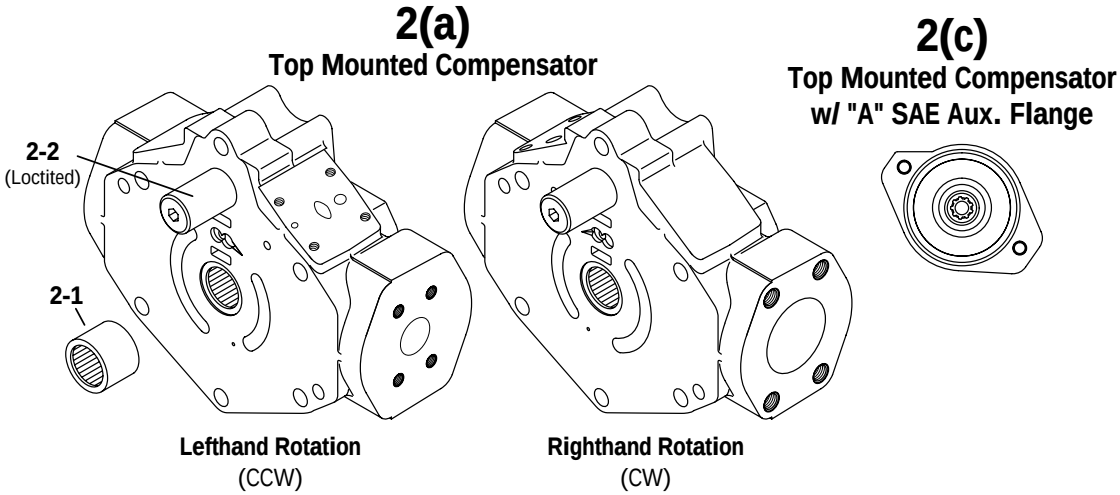


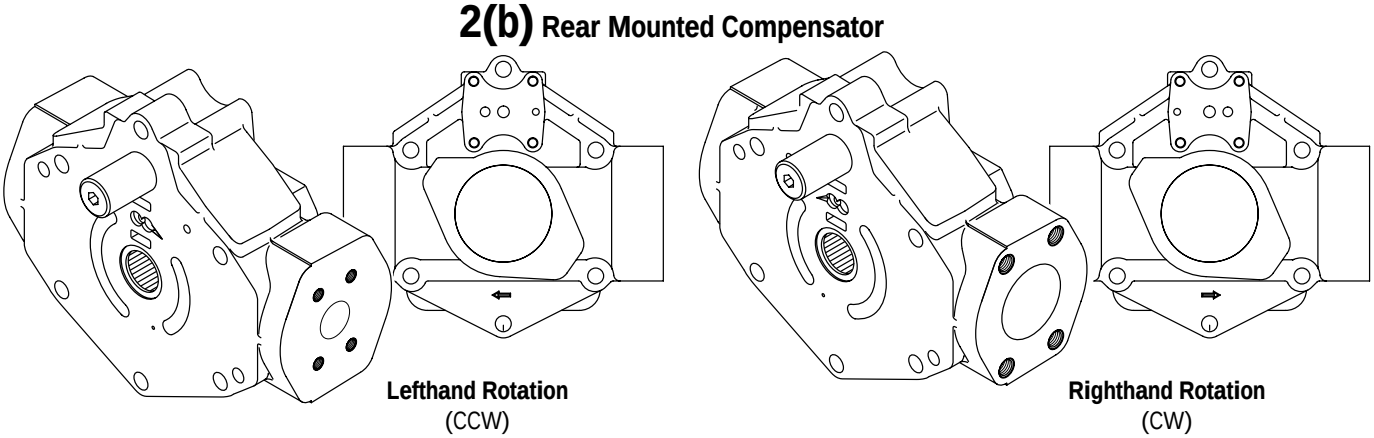


## Item 2 - Parts List

| Item | Lefthand Rotation Part No. | Righthand Rotation Part No. | Qty. | Description |
|---|---|---|---|---|
| **2**(a) | 70523-301 | 70523-305 | 1 | Opposite Side Porting, Top Mounted Compensator Backplate Assembly |
| **2**(b) | ---- | 70523-341 | 1 | Opposite Side Porting, Rear Mounted Compensator Backplate Assembly |
| **2**(c) | 70553-305 | 70553-303 | 1 | Auxiliary 2-Bolt A Flange Series 82-2, Opposite Side Porting Backplate |
| 2-**1** | 16237-11816 | | 1 | Bearing |
| 2-**2** | 70523-614 | | 1 | Guide Pin |

**All left (CCW) or right (CW) directions given are viewed from the input shaft end of the pump.**

# Item 4 - Compensator Assembly

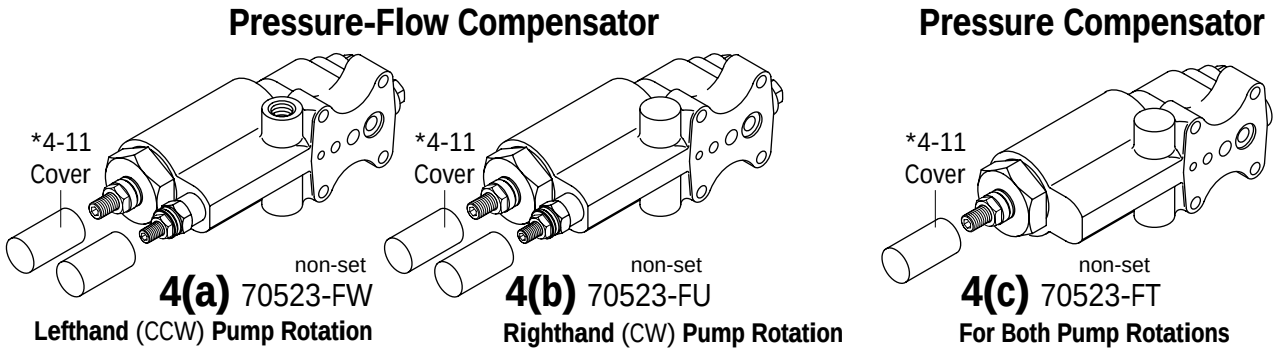


*4-11, Cover not included with non-set compensator assy.

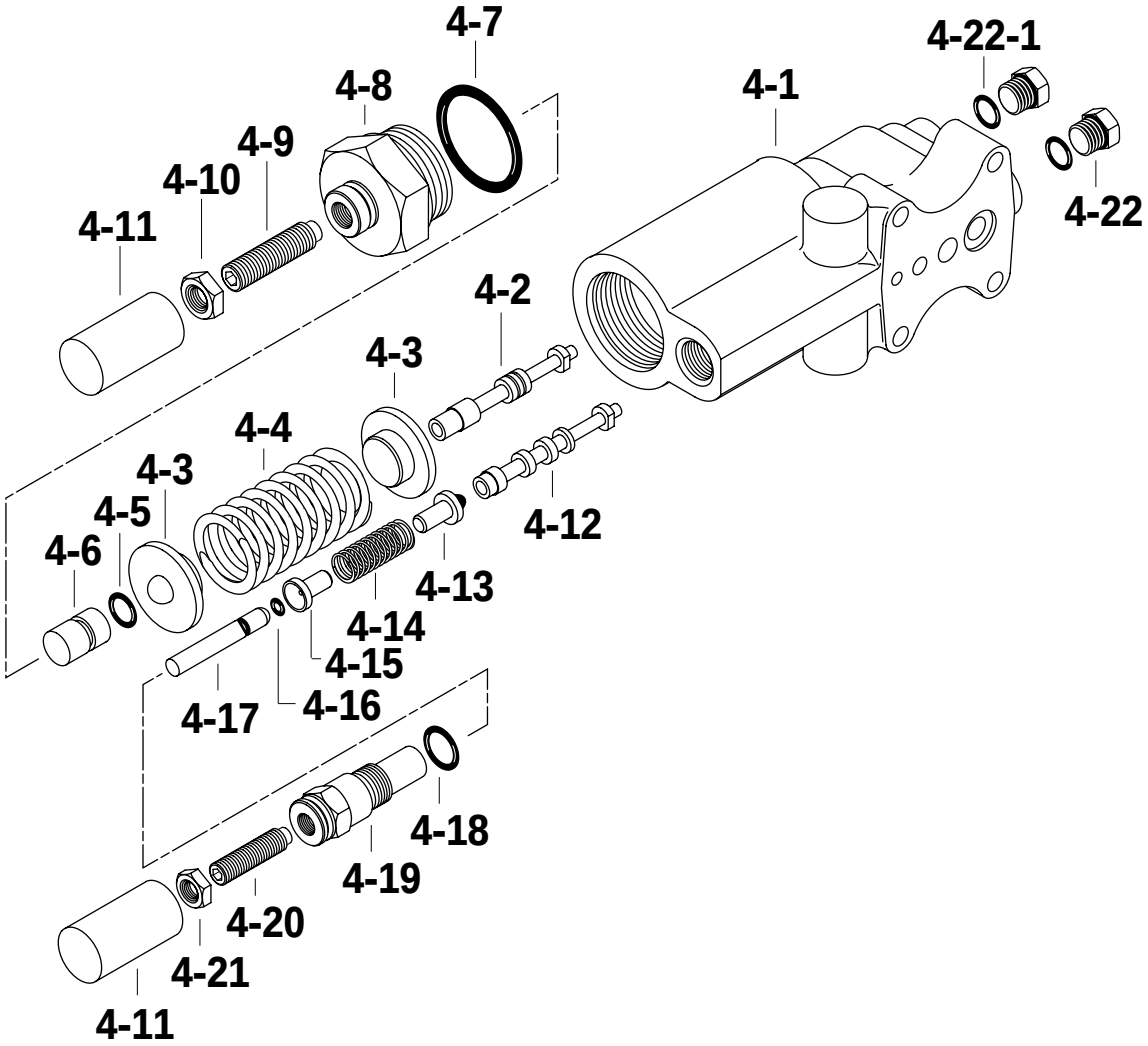

# Item 4 - Compensator Parts List

## Item 4 - Parts List (Refer to drawings)

| | Item | Part No. | Qty. | Description |
|---|---|---|---|---|
| | **4(a)** | 70523-FW | 1 | Non-Set Pressure-Flow Compensator Assembly, Lefthand Rotation |
| | **4(b)** | 70523-FU | 1 | Non-Set Pressure-Flow Compensator Assembly, Righthand Rotation |
| | **4(c)** | 70523-FT | 1 | Non-Set Pressure Compensator Assembly |
| | 4-**1** | N/S | 1 | Compensator Body |
| | 4-**2** | N/S | 1 | Pressure Spool |
| | 4-**3** | 70523-501 | 2 | Spring Pivot |
| | 4-**4** | 17122-8 | 1 | Spring |
| + | 4-**5** | 16003-7-90 | 1 | O-ring, 1.588 mm Dia. x 8.26 mm I.D. [.0625 in. Dia. x .375 in. I.D.] |
| | 4-**6** | 70500-628 | 1 | Pressure Rod |
| + | 4-**7** | 16015-24 | 1 | O-ring, 2.38 mm Dia. x 31.75 mm I.D. [.0937 in. Dia. x 1.25 in. I.D.] |
| | 4-**8** | 70500-627 | 1 | Adjustment Cap, Pressure |
| | 4-**9** | 16138-624 | 1 | Set Screw |
| | 4-**10** | 16024-6 | 1 | Nut |
| | 4-**11*** | 70523-618* | 1or2 | Cover* |
| | 4-**12** | N/S | 1 | Flow Spool |
| | 4-**13** | 70500-605 | 1 | Spring Pivot |
| | 4-**14** | 17046-12 | 1 | Spring |
| | 4-**15** | 70500-629 | 1 | Spring Pivot |
| + | 4-**16** | 16003-1 | 1 | O-ring, 1.59 mm Dia. x 3.175 mm I.D. [.0625 in. Dia. x .125 in. I.D.] |
| | 4-**17** | 70500-631 | 1 | Pressure Rod |
| + | 4-**18** | 16133-6 | 1 | O-ring, 1.98 mm Dia. x 11.89 mm I.D. [.078 in. Dia. x .468 in. I.D.] |
| | 4-**19** | 70500-630 | 1 | Adjustment Cap, Flow |
| | 4-**20** | 16139-516 | 1 | Set Screw |
| | 4-**21** | 16024-5 | 1 | Nut |
| | 4-**22** | 16103-104 | 2 | Plug Assembly |
| + | 4-22-**1** | 16133-4 | 2 | O-ring, 1.83 mm Dia. x 8.92 mm I.D. [.072 in. Dia. x .351 in. I.D.] |

**Legend**
+ Included in seal repair kit listed on page 5.
NSS Not Sold Separately

* Covers are not included with Non-Set Compensator

## Pre-set Pressure-Flow Compensator Assemblies

| Non-Set Assembly | Pre-set Assembly | Pump Rotation | Pressure Setting | Flow Setting |
|---|---|---|---|---|
| 70523-FU | **70523-DS-01** | Righthand (CW) | 176±3.5 bar [2550±50 lbf/in$^2$] | 13.8±0.7 bar [200±10 lbf/in$^2$] |
| 70523-FU | **70523-EL-01** | Righthand (CW) | 193±3.5 bar [2800±50 lbf/in$^2$] | 19.3±0.7 bar [280±10 lbf/in$^2$] |
| 70523-FU | **70523-EW-01** | Righthand (CW) | 155±3.5 bar [2250±50 lbf/in$^2$] | 5.68±1.2 bar [82.5±17.5 lbf/in$^2$] |
| 70523-FU | **70523-FA-01** | Righthand (CW) | 193±3.5 bar [2800±50 lbf/in$^2$] | 13.8±0.7 bar [200±10 lbf/in$^2$] |
| 70523-FU | **70523-FG-01** | Righthand (CW) | 210±3.5 bar [3050±50 lbf/in$^2$] | 13.8±0.7 bar [200±10 lbf/in$^2$] |
| 70523-FU | **70523-FL-01** | Righthand (CW) | 193±3.5 bar [2800±50 lbf/in$^2$] | 15.8±0.7 bar [230±10 lbf/in$^2$] |
| 70523-FW | **70523-FH-02** | Lefthand (CCW) | 210±3.5 bar [3050±50 lbf/in$^2$] | 13.8±0.7 bar [200±10 lbf/in$^2$] |
| 70523-FW | **70523-FM-02** | Lefthand (CCW) | 134±3.5 bar [1950±50 lbf/in$^2$] | 21.7±0.7 bar [315±10 lbf/in$^2$] |

## Pre-set Pressure Compensator Assembly

| Non-Set Assembly | Pre-set Assembly | Pump Rotation | Pressure Setting |
|---|---|---|---|
| 70523-FT | **70523-FJ-03** | Both | 210±3.5 bar [3050±50 lbf/in$^2$] |

# Item 3 - Housing Identification
# Item 5 - Rotating Kit Assembly

## Item 3

Housing Identification

| Item | Part No. | Port Machined |
|---|---|---|
| **3** | 70500-**303** | B |
| | 70500-**311** | A |
| | 70500-**332** | A, B |

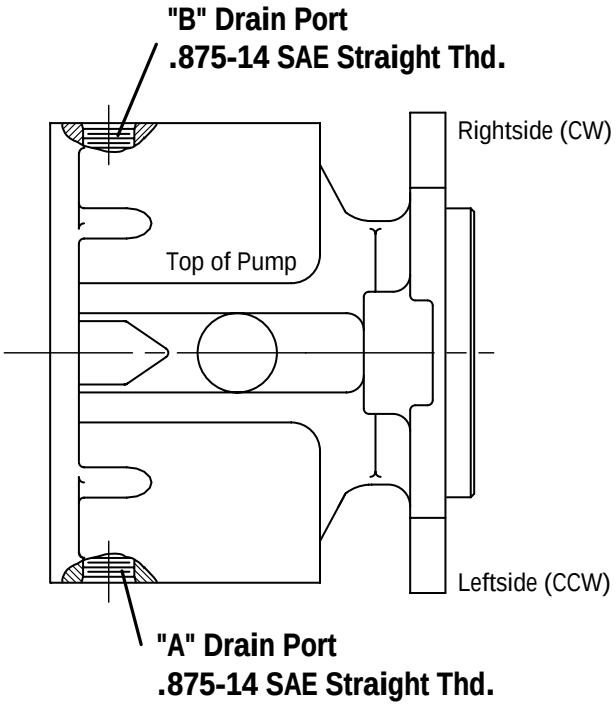


## Item 5

Rotating Kit Assembly

| Item | Part No. | Qty. | Description |
|---|---|---|---|
| **5** | 70502-606 | 1 | Rotating Kit Assembly |
| 5-**1** | NSS | 9 | Piston Assembly |
| 5-**2** | NSS | 1 | Spider |
| 5-**3** | NSS | 1 | Spider Pivot |
| 5-**4** | NSS | 1 | Retainer |
| 5-**5** | NSS | 1 | Piston Block |
| 5-**6** | NSS | 3 | Pins |
| 5-**7** | NSS | 1 | Washer |
| 5-**8** | NSS | 1 | Spring |
| 5-**9** | NSS | 1 | Retaining Ring |

NSS - Not Sold Separately

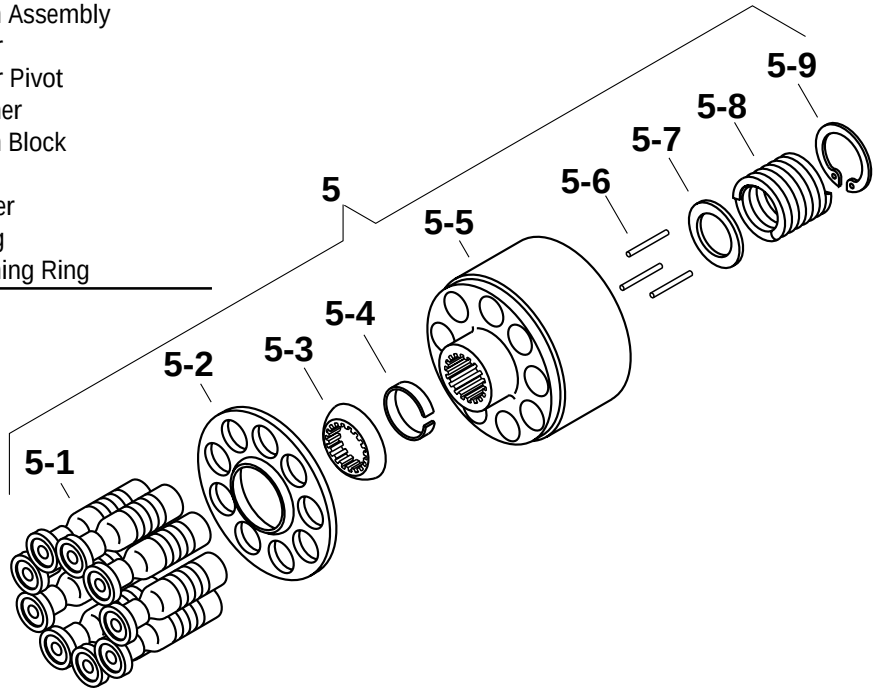

# Mounting Kits

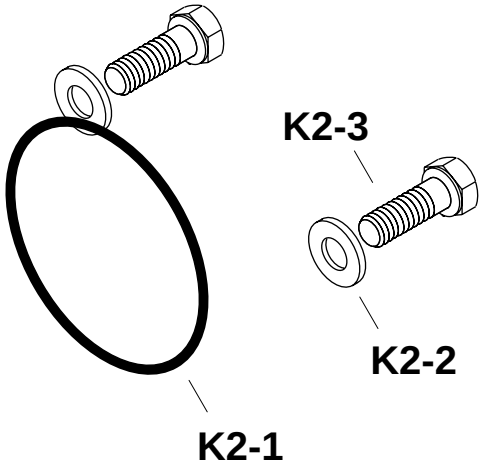


## Kit 2, Gear Pump Mounting

(To Mount "A" SAE flanges)

| Item | Part No. | Qty. | Description |
|---|---|---|---|
| K2 | 70442-929 | 1 | Gear Pump Mounting Kit |
| K2-1 | 16007-14 | 1 | O-ring, 1.59 mm Dia. x 82.55 mm ID. [.0625 in. Dia. x 3.25 in. ID.] |
| K2-2 | 16048-113 | 2 | Washer |
| K2-3 | 16032-612 | 2 | Cap Screws |

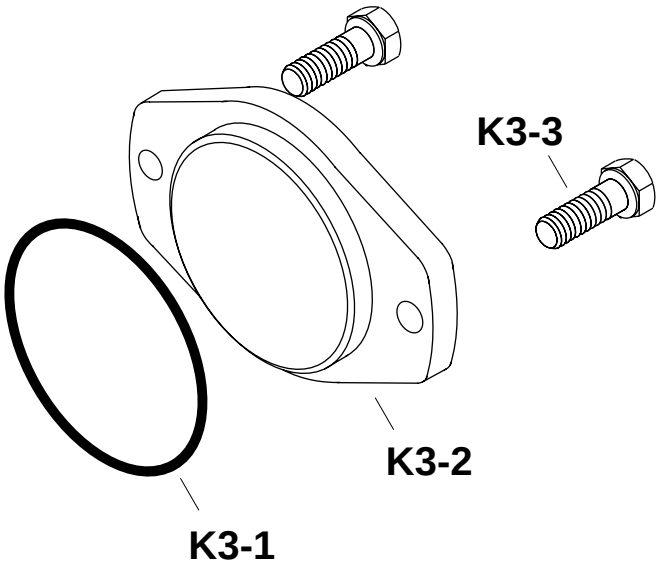


## Kit 3 & 6, Cover Plates

For "A" SAE Flanges

| Item | Part No. | Qty. | Description |
|---|---|---|---|
| K3 | 70142-915 | 1 | Cover Plate Kit for "A" SAE flange |
| K3-1 | 16007-14 | 1 | O-ring, 1.59 mm Dia. x 82.55 mm ID. [.0625 in. Dia. x 3.25 in. ID.] |
| K3-2 | 70142-600 | 1 | Cover Plate |
| K3-3 | 16032-610 | 2 | Cap Screws |

For "B" SAE Flanges (Not Pictured)

| Item | Part No. | Qty. | Description |
|---|---|---|---|
| K6 | 990596-000 | 1 | Cover Plate Kit for "B" SAE flange |
| K6-1 | 102919-000 | 1 | Gasket |
| K6-2 | 250073-000 | 1 | Cover Plate |
| K6-3 | 95865-100 | 2 | Cap Screws |
| K6-4 | 101896-050 | 2 | Lock Washer |

# Product Number

This list of product numbers is to aid in Item identification.
If your product number is not listed contact your Eaton representitive.

## Model 70523, Lefthand Rotation (CCW)

| Product Number | Description of Part Number<br>Drive Shaft Item #1 | Backplate Assy. Item #2 | Housing Assy. Item #3 | Compensator Assy. Item #4 |
|---|---|---|---|---|
| 70523-LAA | 70502-200 | 70523-301 | 70500-303 | 70523-FJ-03 |
| 70523-LAB | 70502-200 | 70523-301 | 70500-303 | 70523-FH-02 |
| 70523-LBF | 70502-202 | 70523-301 | 70500-303 | 70523-FH-02 |
| 70523-LBG | 70502-202 | 70523-301 | 70500-303 | 70523-FJ-03 |
| 70553-LAB | 70552-200 | 70553-305 | 70500-303 | 70523-FH-02 |
| 70553-LAK | 70552-209 | 70553-305 | 70500-303 | 70523-FH-02 |
| 70553-LAR | 70552-203 | 70553-305 | 70500-303 | 70523-FH-02 |

## Model 70523, Righthand Rotation (CW)

| Product Number | Description of Part Number<br>Drive Shaft Item #1 | Backplate Assy. Item #2 | Housing Assy. Item #3 | Compensator Assy. Item #4 |
|---|---|---|---|---|
| 70523-RAA | 70502-200 | 70523-305 | 70500-303 | 70523-FJ-03 |
| 70523-RAB | 70502-200 | 70523-305 | 70500-303 | 70523-FG-01 |
| 70523-RBE | 70502-202 | 70523-305 | 70500-303 | 70523-FJ-03 |
| 70553-RAB | 70552-200 | 70553-303 | 70500-303 | 70523-FG-01 |
| 70553-RAK | 70552-209 | 70553-303 | 70500-303 | 70523-FG-01 |

**All left (CCW) or right (CW) directions given are viewed from the input shaft end of the pump.**

# Repair Information

Cleanliness is extremely important when repairing these pumps. Work in a clean area. Before disconnecting the lines clean port area of pump. Disconnect hydraulic lines and remove pump assembly from vehicle and plug ports. Thoroughly clean the outside of pump. After cleaning, remove port plugs and drain oil.

## Disassembly

ATTENTION: Removal of the adjusting screw covers from cap may void the warranty on this assembly.

1 Clamp the end of the drive shaft in a protected jaw vise with the body of the pump up and remove the four allen head screws (14) holding compensator (4).

2 Remove the compensator assembly (4), 0-ring (26), and gasket (24).

3 Remove the six cap screws (29, four ea. and 30, two ea.) from the backplate of the pump.

4 Use a soft mallet to loosen backplate. Remove backplate (2) and gasket (22) from housing.

5 Remove the control piston (7) remaining on the backplate or in housing.

6 To remove rotating assembly (5) from housing, remove pump from vise and slide rotating assembly off shaft. Caution: pistons may not come out with piston block.

7 Remove pistons (5-1), spider (5-2), and spider pivot (5-3) from piston block (5-5).

8 The piston block assembly (5-5) need not be disassembled unless the internal pins (5-6) or spring (5-8) are damaged.

CAUTION: Use the following procedure if the spring is to be removed from the piston block. The spring (5-8) is highly compressed and the snap ring (5-9) should not be removed without compressing the spring.

The following parts will be needed to disassemble the piston block:

2 ea. 1/2 I.D. x 1-3/8 O.D. flat washer,
1 ea. 5/8 x 1-3/4 flat washer, and
1 ea. 1/2 x 4-1/2 in. N.C. cap screw
1 ea. 1/2 N.C. nut.

Place one of the flat washers over the 1/2 x 4-1/2 in. cap screw and place this through the center of the piston block. Place the 5/8 washer over the cap screw and let it rest on the three pins. Place the other 1/2 in. flat washer on the cap screw and screw the nut on and compress the spring inside the piston block. Use a pair of snap ring pliers and remove the internal snap ring (5-9). Remove the nut and bolt along with the two washers (5-7), three pins (5-6), and the internal pin keeper (5-4).

9 To free shaft seal and shaft, remove retaining ring (12).

10 Remove shaft (1) from housing (3) by tapping backplate end of shaft with a wooden or plastic mallet.

11 Remove shaft seal (25), washer (11), the two retaining rings (13), the two thrust washers (16), and bearing (15) from shaft.

12 To remove the camplate (6) from the housing, remove the two internal retaining rings (12) from the sides of the housing. Remove the two covers (21), the two o-rings (27), the two inner races (19), and the bearings (20). The camplate can now be moved over to one side and removed. The two camplate pivot bearings are a loose slip fit into the housing. Do not be concerned if they are not tight.

13 Remove the spring collar (23) and spring (17). Do not remove the button (18) and roll pin (8) unless they are worn or loose.

14 The pressure-flow compensator assembly (4) may be disassembled for cleaning and inspection.

ATTENTION: Removal of the adjusting screw covers

# Repair Information

from cap may void the warranty on this assembly.

15 Remove pressure adjustment cap (4-8) from compensator housing (4-1). Pressure rod (4-6) will remain in cap (4-8), pull rod from cap.

16 Remove flow adjustment cap (4-19) from compensator housing (4-1). Pressure rod (4-17) will remain in cap (4-19). Pull rod from cap.

17 Remove springs (4-4 and 4-14) and spring pivots (4-3, 4-13 and 4-15) from compensator housing.

18 Remove plugs (4-22), pressure compensator spool (4-2), and flow compensator spool (4-12) from compensator housing (4-1).

19 The shaft seal, all 0-rings, and all gaskets should be removed and replaced with new items upon reassembly.

## Inspect Parts For Wear

1 Inspect the flat surface of the backplate (2), the finish on the piston block side should be smooth and free of grooves. The piston guide should be tight in the backplate. The needle bearing in the backplate should be free of excessive play and remain in the bearing cage. If the backplate has any of the wear characteristics outlined above, replace complete backplate assembly.

2 Inspect the piston block (5). The surface that contacts the backplate should be smooth and free of grooves.

3 The pistons (5-1) should move freely in the piston block bore. If they stick in the bore, examine the bore for scoring or contamination.

4 Examine the O.D. of the piston (5-1) for finish condition. They should not show wear or deep scratches. The shoes should be a snug fit on the ball end of the piston. The flat surface of the shoes should be flat, and smooth. Do not lap piston shoes.

5 Examine the spider (5-2). It should be flat, no cracks, and no signs of wear in the pivot area.

6 Examine the pivot (5-3). It should be smooth and show no signs of wear.

7 Inspect the camplate (6) for the condition of finish of the polished shoe surface. It should show no signs of scoring.

8 Inspect shaft (1) for wear in bearing and spline areas.

9 Inspect thrust bearing (15) and thrust washers (16) for wear.

10 Inspect the needle bearing in the housing assembly (3). If the needles are free of excessive play and remain in the bearing cage, there is no need to replace the housing.

11 Inspect the compensator springs (4-4 and 4-14) for breakage or weakness.

12 Inspect the spools (4-2 and 4-12) for scoring.

13 It is not necessary to inspect the o-rings, retaining rings, gaskets, or shaft seal as they should be replaced as new items and are included in the seal repair kit available for this assembly.

## Reassembly

1 Clean all parts in suitable solvent; lubricate all critical moving parts before reassembly.

2 Install camplate control spring (17) and spring collar (23) in housing (3).

3 Insert camplate (6) into housing (3). Insert needle bearings (20) and bearing inner race (19) over the camplate arms and slide into housing (3). The numbered end of the bearing should face outward and the chamfered I.D. of the race should face inward.

4 Install new 0-ring (27) around O.D. of camplate

# Repair Information

pivot bearing (20). Install trunnion covers (21) and secure with retaining rings (12).

5 Install retaining ring (13) on shaft (1). Install thrust washer (16), thrust bearing (15), and second thrust washer (16). Secure with second retaining ring (13).

6 Install shaft (1) in housing (3) and install washer (11), shaft seal (25), and retain with retaining ring (12). Make sure retaining ring is seated in the groove.

7 If piston block assembly was disassembled, compress the pin keeper (5-4), and install in the spline area of piston block. Install the three pins (5-6) into the special grooves of the piston block spline.

8 Install the washer (5-7), spring (5-8), into the piston block. Use the three washers and the 1/2 x 4-1/2 in. cap screw to compress the spring and retain with retaining ring (5-9). Remove the cap screw and the three washers.

9 Install the pivot (5-3), spider (5-2), and piston assemblies (5-1) in the piston block. Install this assembly in the housing assembly, the piston shoes must be in contact with the camplate. Be sure all the parts are in their proper position.

10 Clamp this assembly in a protected jaw vise with the open end of the housing (3) up.

11 Install new gasket (22).

12 Install control piston (7), and plug (2-2) with new o-ring onto backplate. Note roll pin (3-2) locations.

13 Install backplate (2) and retain with cap screws (29 and 30). Torque to 47 to 54 N-m [35 to 40 lb-ft].

14 Place new o-ring (4-22-1) on plug (4-22). Install plug assembly, flow compensator spool (4-12), spring pivot (4-13), spring (4-14), spring pivot (4-150, pressure rod (4-17) with new 0-ring (4-16), and flow adjustment cap (4-19) with new 0-ring (4-18) into compensator housing (4-1). Torque plug (4-22) 8 to 11 N-m [6 to 8 lb-ft ] and torque flow adjustment cap (4-19) 14 to 16 N-m [10 to 12 lb-ft ].

15 Place new o-ring (4-22-1) on plug (4-22). Install plug assembly, pressure compensator spool (4-2), spring pivot (4-3), spring (4-4), second spring pivot (4-3), pressure rod (4-6) with new o-ring (4-5), and pressure adjustment cap (4-8) with new o-ring (4-7) into compensator housing (4-1). Torque plug (4-22) 8 to 10 N-m [6 to 8 lb-ft ] and torque pressure adjustment cap (4-8) 47 to 54 N-m [35 to 40 lb-ft] .

16 Install new gasket (24) and new o-ring (26), then install compensator assembly (4),and retain with four allen head cap screws (14) and torque to 14 to 16 N-m [10 to 12 lb-ft].

17 Plug ports to preserve cleanliness until installation on vehicle. (Refer to start up procedures.)

# Start-up Procedure

When initially starting a rebuilt load sensing system, it is extremely important that the start-up procedure be followed. It prevents the chance of damaging the pump which might occur if the system was not properly purged with oil before start-up.

1 After the pump has been properly installed onto the machine and all hydraulic connections have been made, check all fittings to make sure that they are tight.

2 Fill the pump housing at least 1/2 full with system oil that has been filtered through a 10 micron filter.

3 Fill the reservoir with an approved oil that has been filtered through a 10 micron filter. Leave the filler cap loose as a means of air that is trapped in the system.

4 Note on gasoline or L.P. engines: remove the coil wire and turn the engine over for 15 seconds. Diesel engines: shut off the fuel flow to the injectors and turn the engine over for 15 seconds. This procedure enables the pump to pick-up the oil before start-up. At this time disconnect the sensor line from the pump compensator and pull one of the valve spools while the engine is being turned over. This allows oil to flow through the sensor line, thus, removing any air in the sensor line. Reconnect the sensor line after a steady flow of oil is coming from the line.

5 Replace the coil wire or return the fuel flow to the injectors and start the engine. Run at low idle speed for one minute. The pump should immediately pick up oil and go into low pressure standby. If there is no indication of fill in 30 seconds, stop engine and determine the cause.

6 After the pump has stabilized in low pressure standby, operate the control valve and steering, if the system is equipped with one, to purge the system of air and to fill the cylinders with oil. Continue operating the system slowly with no load until it responds fully.

7 Check fluid level at the reservoir and refill if necessary to the proper level at the reservoir and refill if necessary to the proper level with an approved filtered oil.

8 Check all line connections for leaks tighten if necessary.

9 The machine is now ready to be put into operation.

10 Short hour filter changes are recommended for the first two changes after placing the machine back into operation. The first filter would be changed in 3-5 hours and the second at approximately 50 hours. Routine scheduled filter changes are recommended for maximum life of hydraulic system.

# Fault - Logic Troubleshooting

This fault - logic troubleshooting guide is a diagnostic aid in locating pump problems.

Match the pump systems with the problem statements and follow the action steps shown in the box diagrams. This will give expedient aid in correcting minor problems eliminating unnecessary machine down time.

Following the fault - logic diagrams are diagram action comments of the action steps shown in the diagrams. Where applicable, the comment number of the statement appears in the action block of the diagrams.

## Explanatory Diagram

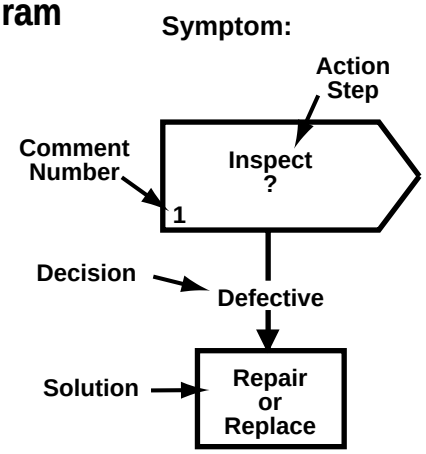


## Recommended Gauge Locations

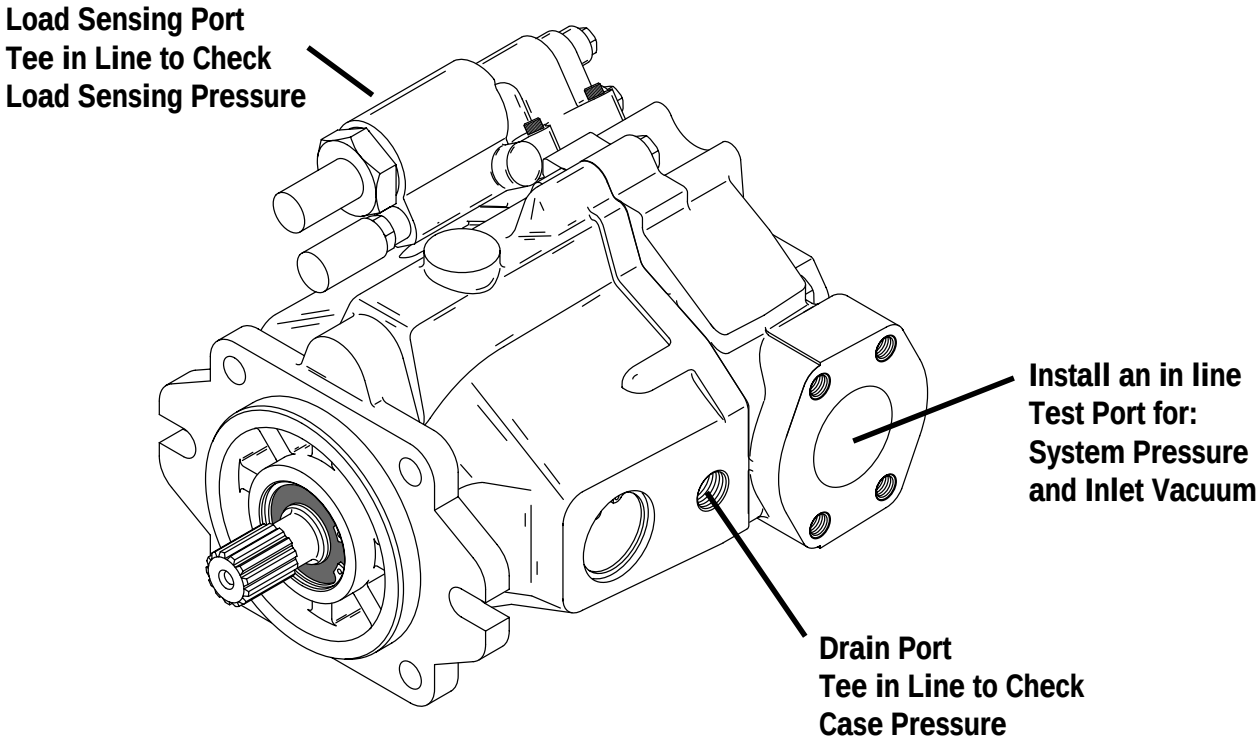


## Gauges Recommended

Inlet vacuum gauge: 2 bar to 1 bar [30 PSI to 30 inHg]
System pressure gauge: 700 bar [10,000 PSI]
Case pressure gauge: 0 to 25 bar [0 to 300 PSI]

# Fault - Logic Troubleshooting

## Symptom: System will not Develop Proper Pressure or Flow

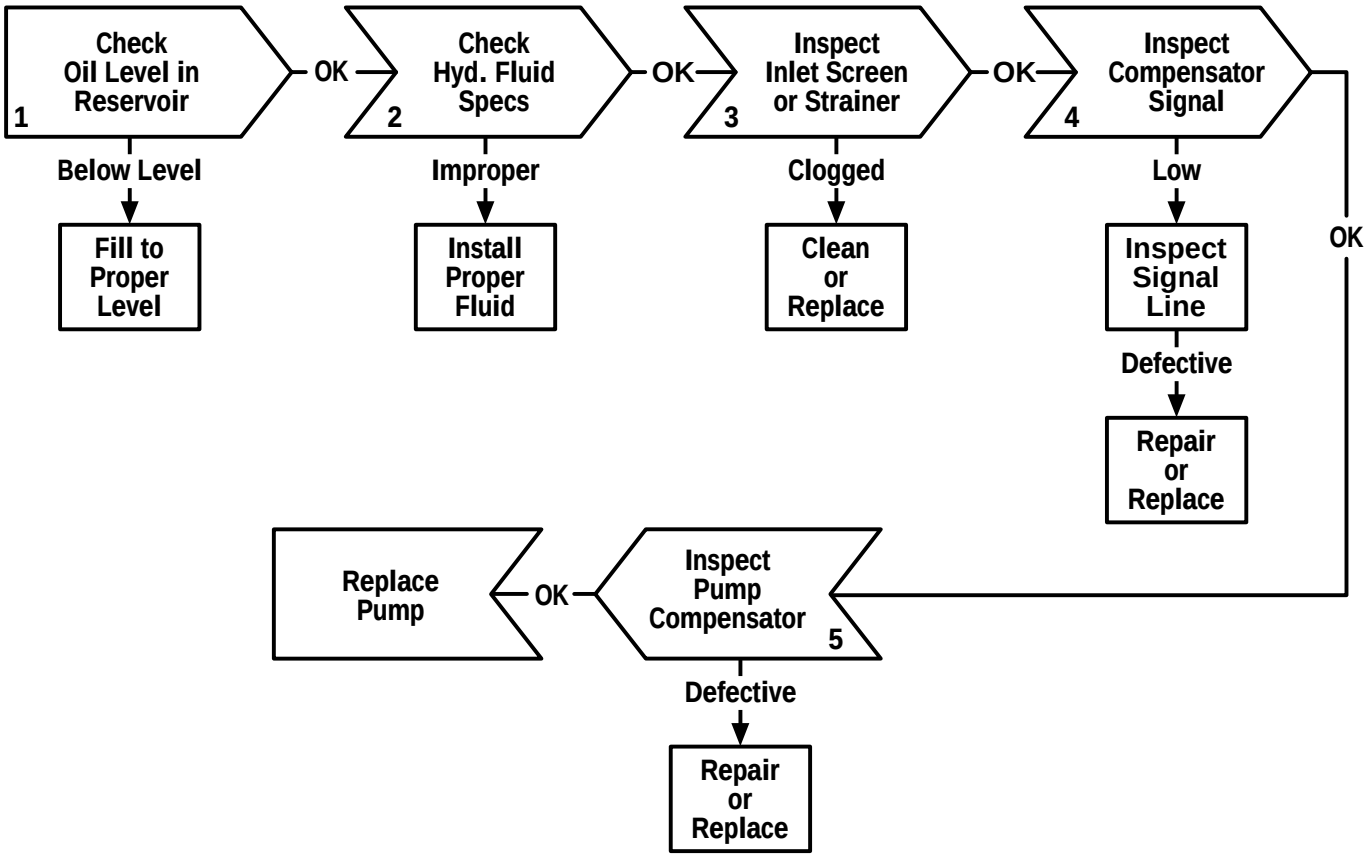

# Fault - Logic Troubleshooting

## Symptom: Pump Noisy or Overheating

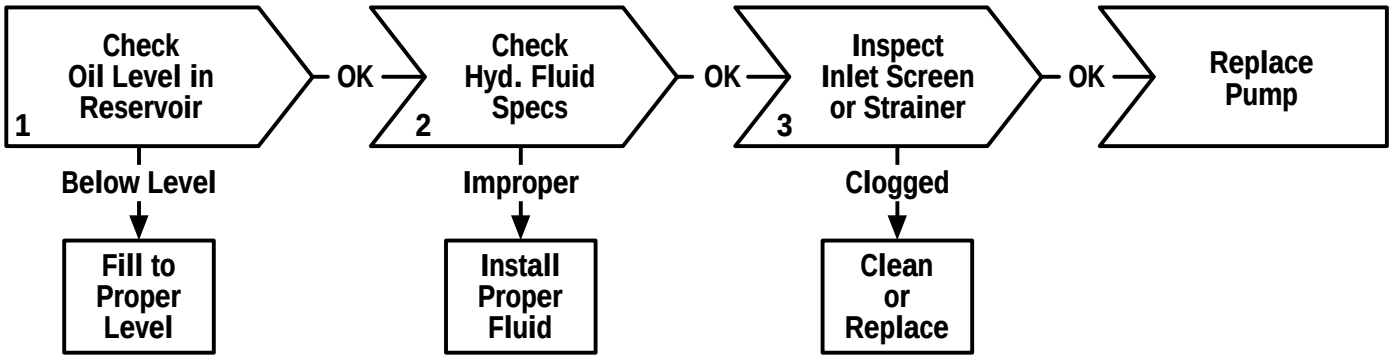


# Diagram Action Step Comments

1. **Check Oil Level in Reservoir:**
   A. Fill to proper level.

2. **Check Hydraulic Fluid Specifications:**
   A. Consult owner/operators manual for the proper type fluid.

3. **Inspect Inlet Screen or Strainer for:**
   A. Suction screen or strainer plugged.
   B. Suction line to small or too long
   C. Suction line collapsed or plugged.

4. **Inspect Compensator Signal for:**
   A. Improper size or length of signal line.
   B. Damaged or obstructed signal line

5. ***Inspect Pump Compensator for:**
   A. Misadjusted pressure or flow setting.
   B. Pressure or flow spool stuck open.
   C. Pressure or flow spring weak or broken.

***Standard factory compensator pressure settings**
A. Pressure compensator set at 3000 to 3100 PSI (Optional settings of 1500 min. to 3100 max. PSI)
B. Flow compensator set at 190 to 210 PSI (Optional settings of 190 min. to 450 max. PSI)

**Each order must include the following information.**

1. Product and/or Part Number
2. Serial Number Code
3. Part Name
4. Quantity

Eaton
14615 Lone Oak Road
Eden Prairie, MN 55344
USA
Tel: 952 937-9800
Fax: 952 974-7722
www.hydraulics.eaton.com

Eaton
20 Rosamond Road
Footscray
Victoria 3011
Australia
Tel: (61) 3 9319 8222
Fax: (61) 3 9318 5714

Eaton
46 New Lane, Havant
Hampshire PO9 2NB
England
Tel: (44) 23 92 486 451
Fax: (44) 23 92 487 110

EATON | Hydraulics

©2002 Eaton Corporation
All rights reserved
Printed in USA
Document No. 06-617
February 2003