Hydraulics

Electronic Proportional (EP) Control for Medium Duty 72400 Piston Pumps

The Electronic Proportional (EP) Control is ideal for a wide range of mobile and industrial applications where electrical control of pump displacement is desired. Eaton's robust design incorporates an electronic module, proportional solenoids and a valve assembly.

Pump displacement is controlled by an input command signal which is converted into proportional current output by the electronic module. The proportional solenoid-actuated valve assembly then converts the current output into proportional pump displacement.

Designed to meet the rigorous duty cycle requirements of off-highway equipment, the EP Control utilizes an electronic module encapsulated in an aluminum enclosure and environmentally-sealed Metri-Pack® connectors to assure maximum protection from the elements. The EP Control is designed to resist Electromagnetic Interference (EMI) which could affect proper operation.

The EP Control offers maximum design and application flexibility with two different types of command input options and compatibility with both 12 and 24 Vdc power supplies. Typical input devices include joysticks (1-6 Vdc) and PLCs (±4-20 mA).

For precise, repeatable operation, closed-loop current control is used to compensate for resistance and voltage changes of the proportional solenoids due to temperature variation. In the event of a power loss or loss of signal, the EP Control automatically returns the pump to neutral. Mechanical feedback of the swashplate position provides closed-loop control to maintain the selected displacement setting over a wide range of operating conditions. Solenoids have integral manual override actuators.

EP Control Features

- Robust, flexible electronic pump control
- Electronic module encapsulated for environmental protection
- Automotive style environmentally sealed Metri-Pack® connectors
- Closed-loop current control compensates for resistance change of the proportional solenoids due to temperature variations
- Return to neutral for loss of power or loss of command input signal
- Mechanical feedback of swashplate position for closed-loop control
- Two choices for command input signal
- Operates from 12 or 24 Vdc power supply
- Ease of installation
- Operating temperature range -40° to +85° C
- On-pump mounting for many installations
- External neutral adjustment
- Manual override capability
- Drive module qualification per SAE J1455, SAE J1113, CISPR 25
- External fuse (customer supplied): 3A

Electronic Module Qualification
(Contact Eaton for Specific Levels)

- *SAE J1455 - Recommended Environmental Practices for Electronic Equipment Design*
  - Humidity/Temperature Extreme Cycling
  - Salt Spray
  - Splash & Immersion
  - Steam Cleaning/High Pressure Wash
  - Vibration
  - Mechanical Shock
  - Temperature Cycling
  - Load Dump Transients
  - Inductive Load Switching Transients
- *SAE J1113 - Electromagnetic Susceptibility Measurement Procedures for Vehicle Components*
  - EMI/EMC - Conducted & Radiated Immunity
- *CISPR 25 - International Electrotechnical Commission "Limits and Methods of Measurement of Radio Disturbance Characteristics for the Protection of Receivers used on Board Vehicles"*
  - EMI/EMC - Conducted & Radiated Emissions

Model Code Position 16,17

MODEL CODE	MODEL CODE DESCRIPTION COMMAND INPUT SIGNAL	TYPICAL INPUT DEVICES	NOMINAL COMMAND INPUT IMPEDANCE OF ELECTRONIC MODULE
EE	1 to 6 Vdc Potentiometric	Joysticks or potentiometers with a resistance between 160 ohms and 50K ohms	500K Ohms
EG	±4-20 mA Current Loop	Programmable Logic Controllers (PLC)	250 Ohms
EC	12 Volts	Requires customer supplied electronics	
ED	24 Volts	Requires customer supplied electronics	

Interconnect Schematic

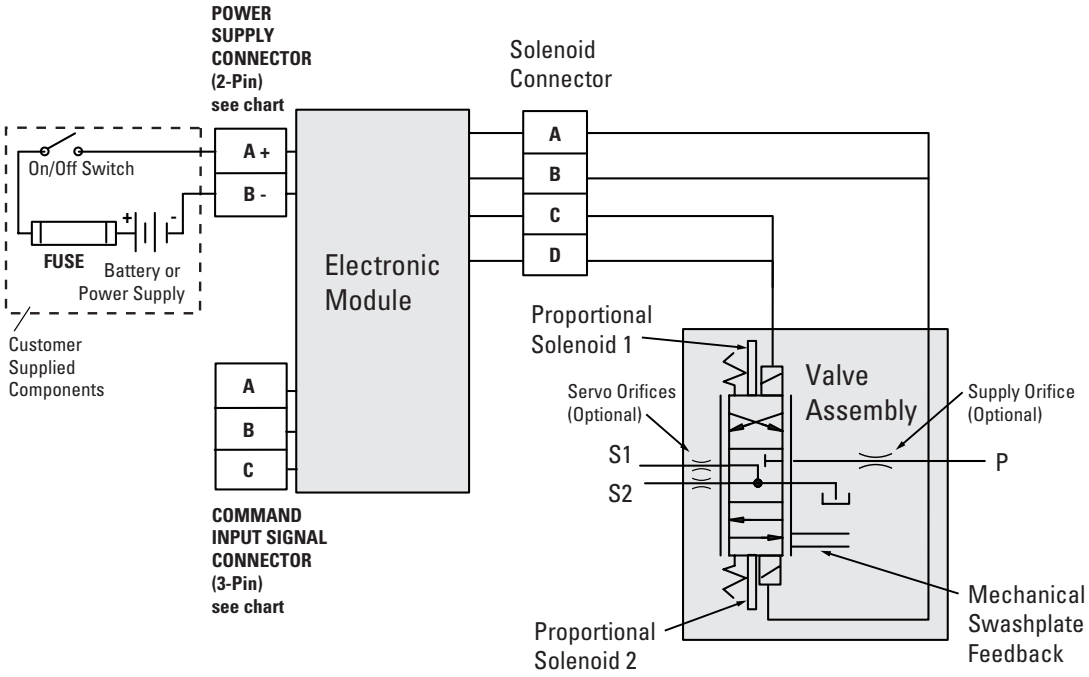

Command Input Signal Connector

COMMAND INPUT SIGNAL	PINS	WIRE COLOR	SIGNAL
1 to 6 Vdc Potentiometric	A	Black	Ref Low - 1 Vdc
	B	Green	Command (wiper)
	C	Red	Ref Hi - 6 Vdc
±4-20 mA Current Loop	A	Orange	Loop Return
	B	White	Loop In
	C	No Connection Required*	

*EP Control Electronic Module Mating Connector Kit 990762-000 contains plug used to seal mating end connector.

Power Supply Connector

PINS	WIRE COLOR	SIGNAL
A	Red	+ Supply Voltage
B	Black	Supply Return

Fuse Rating

3 Amp SLO-BLO® (Time Delay) fuse for 12-24 Vdc system - customer supplied

Valve Assembly

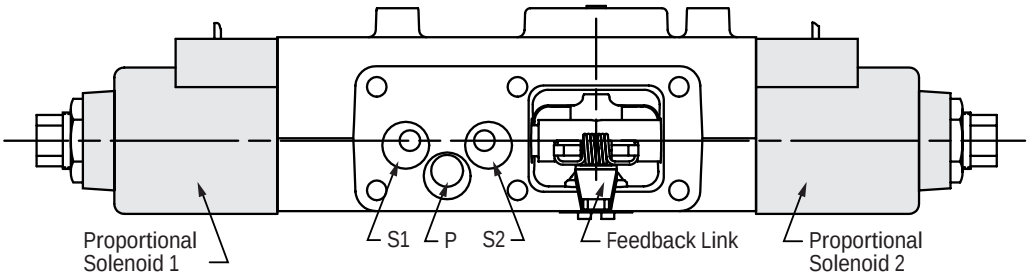

Installation

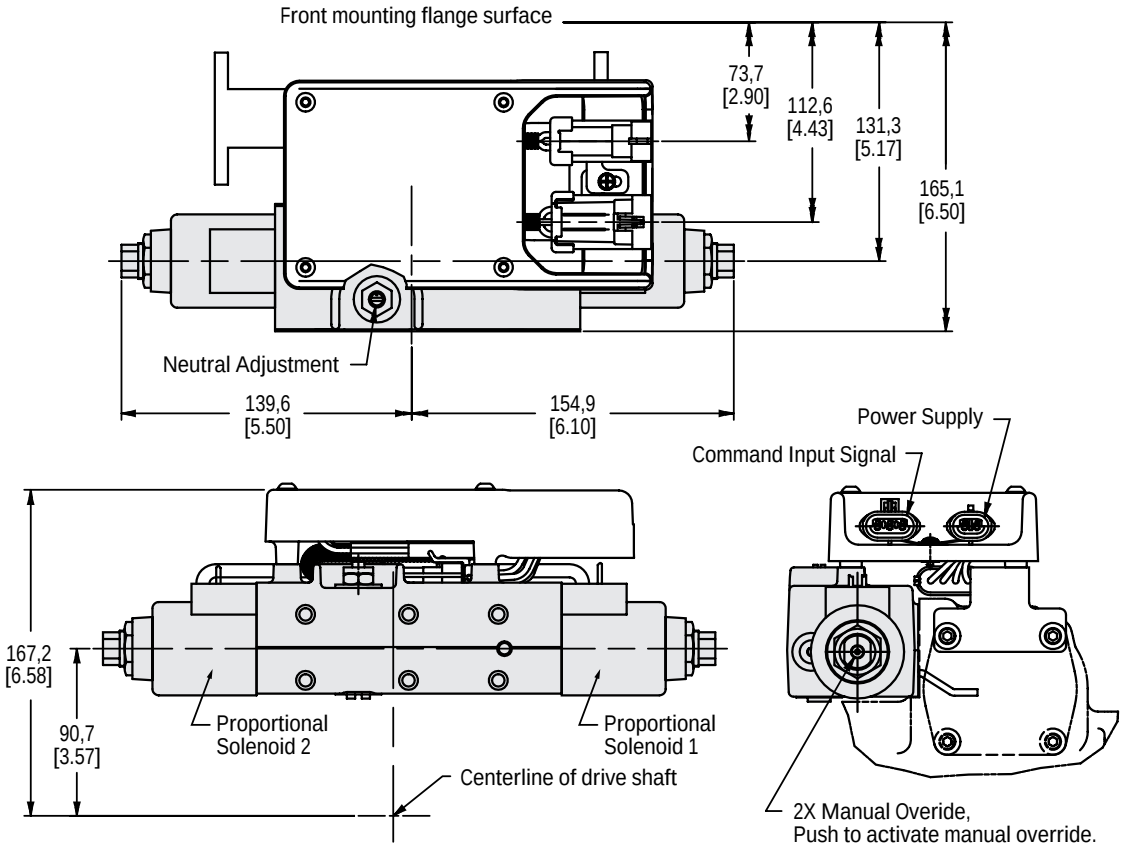

EP Control Connector Kits

Electronic Module Mating Connector Kit

KIT NO.		PART (QTY.)	DELPHI PACKARD P/N
990762-000	**Command Input Signal**	Connector (1)	1211 0293
		Terminal (3)	1204 8074
		Cable Seal (3)	1204 8086
		Cavity Plug (1)	1205 9168
		Secondary Lock (1)	1205 2845
	Power Supply	Connector (1)	1205 2641
		Terminal (2)	1204 8074
		Cable Seal (2)	1204 8086
		Secondary Lock (1)	1205 2634

Recommended wire size: 16 - 18 AWG
Recommended cable diameter: 2.03 - 2.80 mm
Alternate reference source: Pioneer Standard Electronics 1-800-257-6613
www.pios.com

Solenoid Coil Mating Connector Kit

(not needed when using an Eaton Electronic Module)

KIT NO.	PART (QTY.)	DELPHI PACKARD P/N
9900023-000	Connector (1)	1218 6568
	Terminal (4)	1204 8074
	Cable Seal (4)	1204 8086
	Secondary Lock (1)	1204 7948

Recommended wire size: 16 - 18 AWG
Recommended cable diameter: 2.03 - 2.80 mm
Alternate reference source: Pioneer Standard Electronics 1-800-257-6613
www.pios.com

Solenoid Connector Update Kit

Note: This kit was created to update electrical connectors, on field units, to the current design. It is to be used when replacing solenoid coils, with the previous-design connectors, with new coils with new-style connectors.

The kit contains necessary parts and a tool to update the connector that mates the new solenoid coil connector.

KIT NO.	PART (QTY.)	DELPHI PACKARD P/N
9900045-000	Tool (1)	1209 4429
	4-Pin Housing Connector (Female) (1)	1218 6568
	4-Pin Housing Connector (Male) (1)	1218 6271

Pump Displacement vs. Input Signal

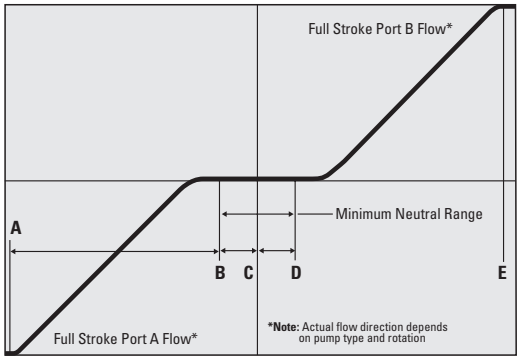

Typical Control Characteristics

	A (MAX)	B (MIN)	C	D (MIN)	E (MAX)
Command Input Signal					
1-6 Vdc	1.5 Vdc	3.3 Vdc	3.5 Vdc	3.7 Vdc	5.5 Vdc
±4-20 mA	-20 mA	-4.5 mA	0 mA	+4.5 mA	+20 mA
Shaft Rotation					
CCW	Solenoid #2		Neither	Solenoid #1	
	Flow OUT port "B"		No flow	Flow OUT port "A"	
CW	Solenoid #2		Neither	Solenoid #1	
	Flow OUT port "A"		No Flow	Flow OUT port "B"	

Note: The +20 mA command input signal configuration operates the pump in one direction. The customer has to change the polarity on the -20 mA signal to operate the pump in the opposite direction.

EP Control Kits

KIT NO.	MODEL CODE REF.	KIT DESCRIPTION	INPUT SIGNAL	VALVE ASSEMBLY	ELECTRONIC MODULE	VOLTAGE
9900015-000	EE	EP Ctrl Kit MD 72400: 1-6 V input, w/o brackets	1-6 V	4993057-012	111520-016	12/24 V
9900016-000	EC	EP Ctrl Kit MD 72400: 12 V coils w/o electronics	—	4993057-012	—	12 V
9900017-000	ED	EP Ctrl Kit MD 72400: 24 V coils w/o electronics	—	4993057-024	—	24 V
9900019-000	EG	EP Ctrl Kit MD 72400: ±4-20 mA input, w/o brackets	±4-20 mA	4993057-012	111520-020	12/24 V
9900021-000	EG	EP Ctrl Kit MD 72400: ±4-20 mA input	±4-20 mA	4993057-012	111520-020	12/24 V
9900022-000	EE	EP Ctrl Kit MD 72400: 1-6 V input	1-6 V	4993057-012	111520-016	12/24 V
990830-000		EP Crtl Electronic Module 1-6 V	1-6 V	—	111520-016	—
990832-000		EP Crtl Electronic Module ±4-20 mA	±4-20 mA	—	111520-020	—
72400-942		Brackets and Screws				

Note: All kits using Eaton Electronic Modules use 12 V coils.

⚠CAUTION **In order to assure the most reliable installation and operation of any electronic control, proper component selection and installation procedures must be followed with respect to interconnection wiring harnesses, input command signal devices, fusing, and input power switching.**

Appropriate industry practices must be followed to prevent damage of and shorting of all electrical and electronic components caused by environmental hazards and application specific hazards. Typical hazards that damage the wiring harnesses or other components are abrasion, moving objects, and heat from the engine or exhaust system. Moisture can damage poorly sealed connectors and/or components, causing short circuits and other problems like corrosion.

A switch must be installed in line with (+ battery) power to the electronic module, so that power may quickly be disconnected in case of emergency (component failure or inadvertent commands). A fuse rated at the maximum module operating current (3 Amp) must be installed in the + battery line to the electronic module.

All the electrical connections to the EP Control electronic module must be disconnected prior to performing any electrical welding on the vehicle or machine. The electronic module and/or the hydraulic pump are not to be used as a connection point for electrical welding equipment.

During initial start-up and/or checkout of the machine after service, the machine must be placed on jack stands to prevent inadvertent movement.

The reliable operation and suitability of this product is dependent upon how it is applied and the other components used in the system. The system integrator must review all aspects of the application and all of the components used to assure proper operation and reliability.

Information contained in this publication is accurate as of the publication date and is subject to change without notice. Performance values are typical values. Customers are responsible for selecting products for their applications using normal engineering methods.

Eaton
14615 Lone Oak Road
Eden Prairie, MN 55344
Telephone: 952 937-9800
Fax: 952 974-7130
www.hydraulics.eaton.com

Eaton
20 Rosamond Road
Footscray
Victory 3011
Australia
Tele: (61) 3 9319 8222
Fax: (61) 3 9318 5714

Eaton
46 New Lane, Havant
Hampshire PO9 2NB
England
Tele: (44) 23 92 486 451
Fax: (44) 23 92 487 110

© 2001 Eaton Corporation
All Rights Reserved

Printed in USA
Document No. E-PUPI-MS002-E
Supersedes 01-10-0003-EN-0901
September 2002

EATON | Hydraulics