EATON | Hydraulics

Model 70160 Variable Displacement Piston Pump

Parts Information

EN-801 (V-03)

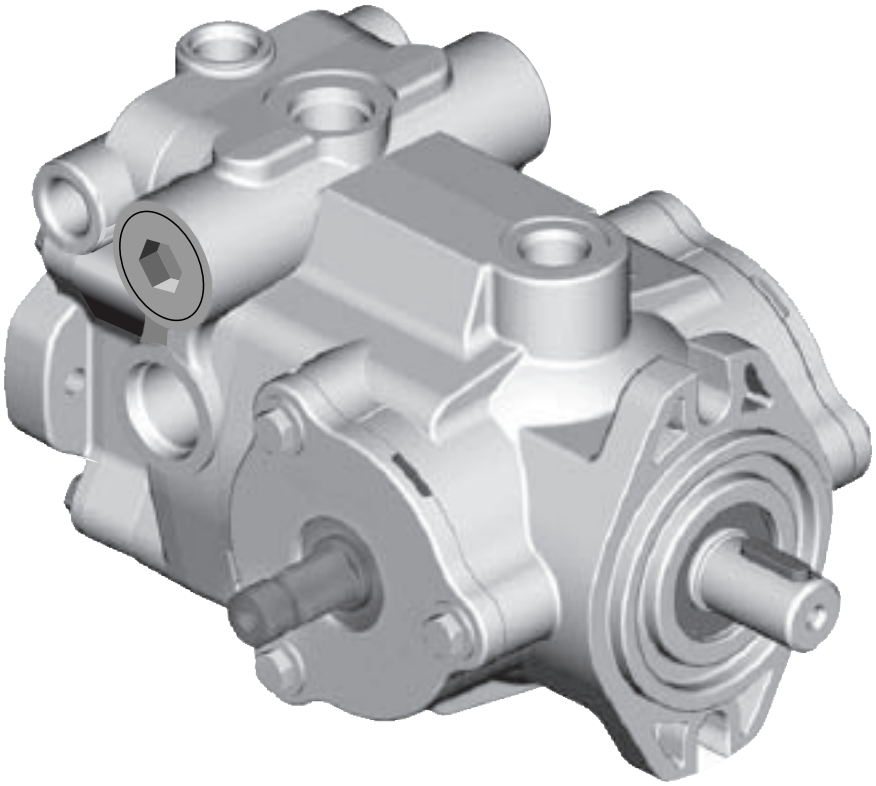

Notes:

Identification Numbers - Manually Variable Displacement Piston Pump

Stamped on each unit's mounting flange.

A - Product Number Description
- 70160 = Single Piston Pump
- 78162 = Single Piston Pump with Gear Pump
- 78161 = Tandem Piston Pumps
- 78163 = Tandem Piston Pumps with Gear Pump

B - Sequential Numbering

C - Engineering Design Code

Single Pump - Product Number:

70160 - RAA - 03

A B C

Tandem Pumps - Product Number:

78163 - RAB - 03

A B C

Serial Number Code:

A 98 01 31 JB

- A: Revision level of parts list.
- 98: Last two digits of year built. (98 for 1998 etc.)
- 01: Month (two digits)
- 31: Day of Month (two digits)
- JB: Tester's Initials

Each order must include the following information.

1. Product and/or Part Number
2. Serial Number Code
3. Part Name
4. Quantity

Tools Required

- 1/2, 9/16, 7/8 & 1-1/8 in. sockets and/or end wrenches
- Torque wrench (136 N·m [100 lbf·ft] capacity)
- Ratchet wrench
- 5/16 in. and 7/16 Allen wrenches or bit sockets
- Internal and external retaining ring pliers
- Small screwdrivers (2)
- Hammer (soft face)
- Light Petroleum Jelly
- Seal driver or similar tool

Parts Drawing

Pump drawn below is typical of a right hand pump.

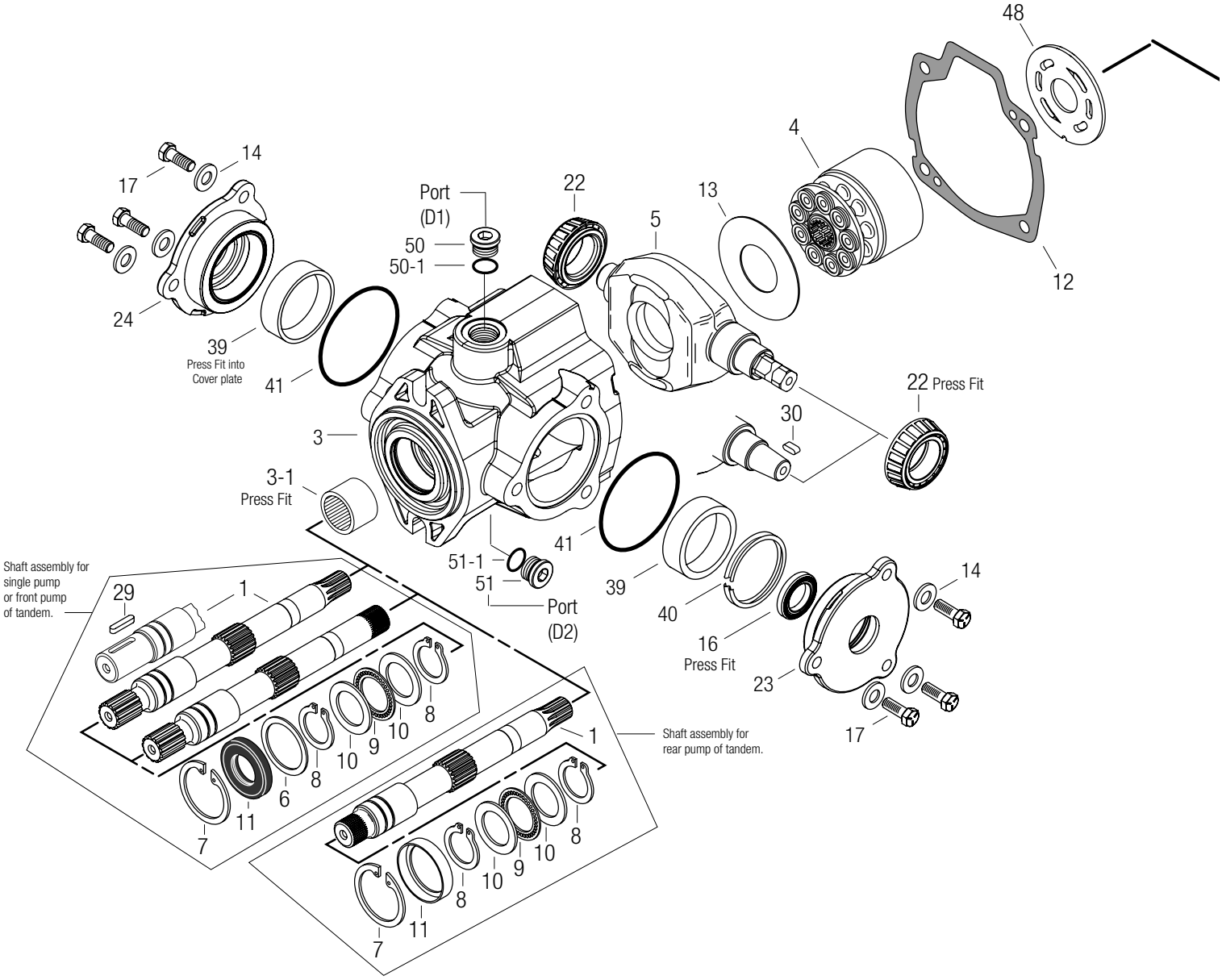

Parts Drawing

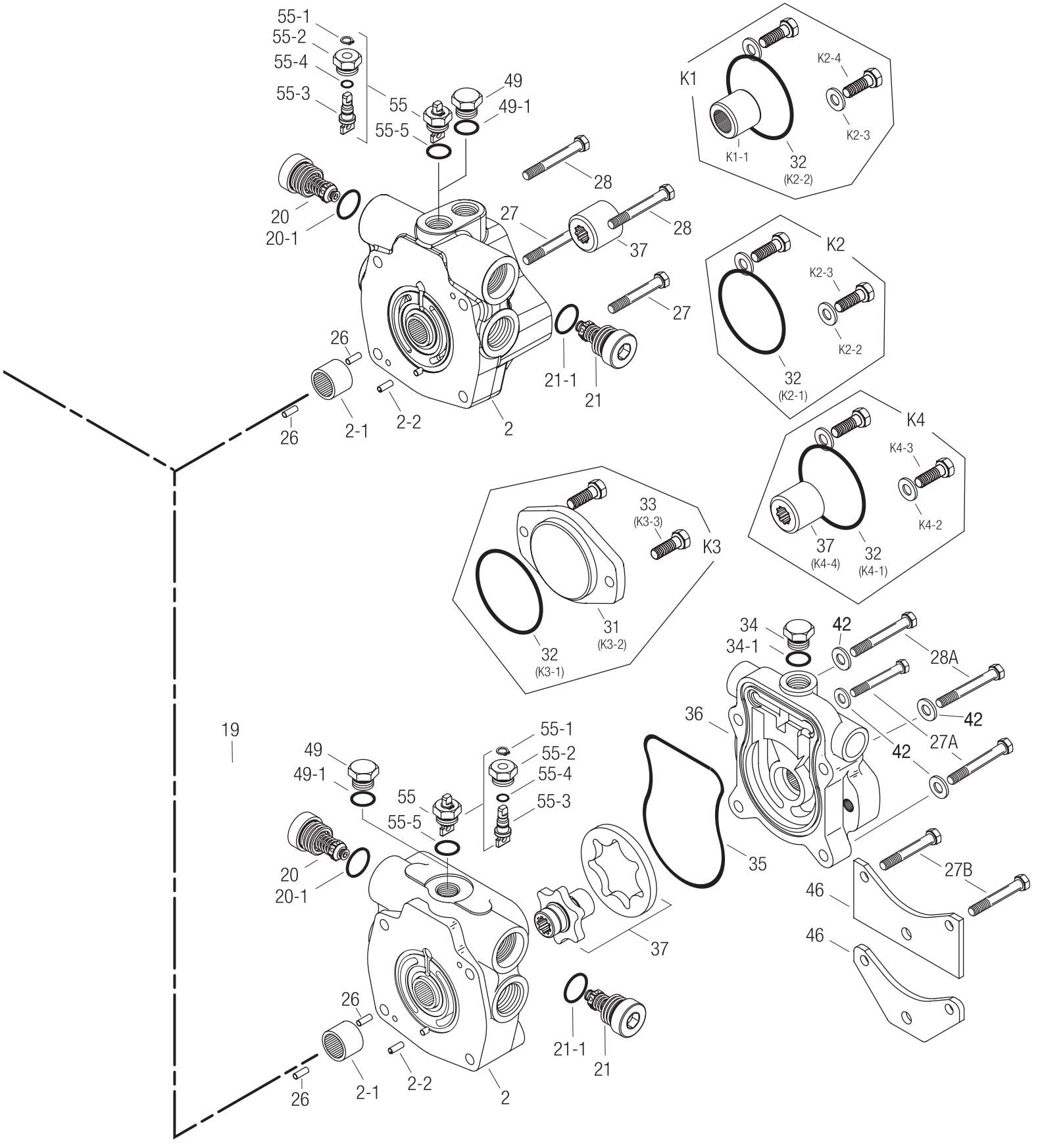

Parts List

Parts listed below are to service catalog units. Other variations of units are built that have parts altered for special requirements. The non-catalog units can be serviced with the parts list below using caution for proper identification. Contact an Eaton representative with any questions concerning your selection. Have your final assembly number ready when contacting representative.

	Item	03 Part No.	Qty.	Description
	1	◆	1	Drive Shaft (Identification drawing on page #8)
	2	◆	1	Endcover Assembly (Identification drawing and parts list on page #9)
	3	◆	1	Housing Assembly (Identification drawing on page #10)
	3-1	16238-11616	1	Bearing (Press Fit)
	4	70111-692	1	Rotating Kit Assembly (parts list on page #10)
	5		1	Swashplate, 20,3 cm^3/r [1.24 in^3/r] Displacement
		70160-623		Square Arm
		70160-617		Tapered Arm
	5		1	Swashplate, 23,6 cm^3/r [1.44 in^3/r] Displacement
		70160-620		Square Arm
		70160-618		Tapered Arm
	6	16048-312	1	Washer
+	7	16077-26	1	Retaining Ring
+	8	16078-16	2	Retaining Ring
	9	16241-1625	1	Thrust Bearing
	10	16241-C1625	2	Bearing Race
+	11	16253-16	1	Shaft Seal, Drive
	11	16253-216	1	Viton Shaft Seal, Drive
	11	70102-636	1	Spacer
+	12	70111-701	1	Housing Gasket
	13	70160-504	1	Swashplate Insert
	14	106013-038	6	Washer
+	16	16253-214	1	Shaft Seal, Trunnion
	17	16136-610	6	Screw, Cap
	20	◆	1	for Port "C" (Identification drawing on page #11) Relief Valve S/A
+	20-1	16133-12	1	O-ring
	21	◆	1	for Port "D" (Identification drawing on page #11) Relief Valve S/A
+	21-1	16133-12	1	O-ring
	22	16320-117	2	Cone Bearing
	23	70160-508	1	Cover Plate
	24	70160-510	1	Cover Plate
	26	16028-304	2	Dowel Pin
	27	16136-520	2	Cap Screws, 5/16-18, 50,8 mm [2 in.] Long
	27A	16136-532	2	Cap Screws, 5/16-18, 82,6 mm [3.25 in.] Long
	27B	16136-534	2	Cap Screws, 5/16-18, 88,9 mm [3.5 in.] Long
	28	16136-524	2	Cap Screws, 5/16-18, 63,5 mm [2.5 in.] Long
	28A	16136-536	2	Cap Screws, 5/16-18, 95,3 mm [3.75 in.] Long
	28B	16136-540	2	Cap Screws, 5/16-18, 101,6 mm [4.00 in.] Long
	29		1	Key, Drive Shaft
		24500-619		Used with 7/8 in. dia. drive shaft.
	30	16246-430	1	Key, Tapered Arm
	31	70142-600	1	Cover Plate (In K3 kit)
+	32	16007-14	1	O-ring (In K1, K2, K3, & K4 kit)
	33	16036-610	2	Cap Screws, Cover Plate (In K3 kit)
	34	16103-108	1	Plug Assembly
+	34-1	16133-8	1	O-ring, 2,21 mm Dia. x 16,36 mm ID. [.087 in. Dia. x .644 in. ID.]
+	35	70111-703	1	Molded O-ring
	36	◆	1	Charge Pump Adaptor (Identification drawing and parts list on page #12 & #13)
	37		1	Gerotor set and coupler sub-assembly
		70111-642		6,9 cm^3/r [.42 in^3/r] displacement, 6,35 mm [.25 in] width
		70111-646		13,8 cm^3/r [.84 in^3/r] displacement, 12,7 mm [.5 in] width
	37	70111-667	1	9 tooth coupler (In Kit 4)

Parts List

Item	03 Part No.	Qty.	Description
37	70111-687	1	11 tooth coupler (In Kit 5)
39	16321-117	2	Cup, Bearing
40	N/S	1	Ring, Crush (Shim kit must be ordered to replace crush ring).
+ 41	16015-44	2	O-ring, 2.38 mm Dia. x 66.68 mm I.D. [.0937 in. Dia. x 2.625 in. I.D.]
42	106013-031	4	Washer
46	70111-632	1	Mounting Bracket, Square shaped (for units with integral charge only)
46	70111-709	1	Mounting Bracket, "V" shaped (for units with integral charge only)
48	◆	1	Valve Plate (Identification drawing on page #11)
	70113-008		Righthand (CW) Rotation
	70113-009		Lefthand (CCW) Rotation
+ 49	16103-108	1	Plug Assembly
49-1	16133-8	1	O-ring, 2,21 mm Dia. x 16,36 mm I.D. [.087 in. Dia. x .644 in. I.D.]
50	16103-308	1	Plug Assembly
+ 50-1	16133-8	1	O-ring, 2,21 mm Dia. x 16,36 mm I.D. [.087 in. Dia. x .644 in. I.D.]
51	16103-308	1	Plug Assembly
+ 51-1	16133-8	1	O-ring, 1,98 mm Dia. x 11,89 mm ID. [.078 in. Dia. x .468 in. ID.]
55	113393-001	1	Bypass Valve sub-assembly
+ 55-1	16078-6	1	Retaining Ring
55-2	70300-609	1	Separator Plug
55-3	113392-001	1	Separator
+ 55-4	16003-7-90	1	O-ring, 1,59 mm Dia. x 9,53 mm I.D. [.0625 in. Dia. x .375 in. I.D.]
+ 55-5	16133-8	1	O-ring, 2,21 mm Dia. x 16,36 mm I.D. [.087 in. Dia. x .644 in. I.D.]

Mounting Kits

K1	70142-944	1	Tandem Piston Pump Mounting Kit
K1-1	70111-666	1	35T Coupler, 36,8 mm [1.45 in.] long
K1-2	16007-14	1	O-ring, 1,59 mm Dia. x 101,6 mm ID. [.0625 in. Dia. x 4 in. ID.]
K1-3	16136-613	2	Cap Screws
K1-4	16048-8	2	Washer
K2	70442-929	1	Gear Pump Mounting Kit
K2-1	16007-14	1	O-ring, 1,59 mm Dia. x 82,55 mm ID. [.0625 in. Dia. x 3.25 in. ID.]
K2-2	16048-113	2	Washer
K2-3	16136-612	2	Cap Screws
K3	70142-915	1	Cover Plate Kit
K3-1	16007-14	1	O-ring, 1,59 mm Dia. x 82,55 mm ID. [.0625 in. Dia. x 3.25 in. ID.]
K3-2	70142-600	1	Cover Plate
K3-3	16136-610	2	Cap Screws
K4	70144-903	1	Gear Pump Mounting Kit with Coupler
K4-1	16007-14	1	O-ring, 1,59 mm Dia. x 101,6 mm ID. [.0625 in. Dia. x 4 in. ID.]
K4-2	16048-113	2	Washer
K4-3	16136-612	2	Cap Screws
K4-4	70111-667	1	9T Coupler

Seal Repair Kit

9900341-000	1	Seal Repair Kit for 70160 Code 03 piston pump.
70160-903	1	Control Shaft Shim Kit (to replace crush ring (40) after replacement of cover plate).

Legend

◆	Refer to specific item parts list.
+	Common parts to seal repair kits.
N/S	Not Serviceable

Item 1 - Drive Shaft Identification

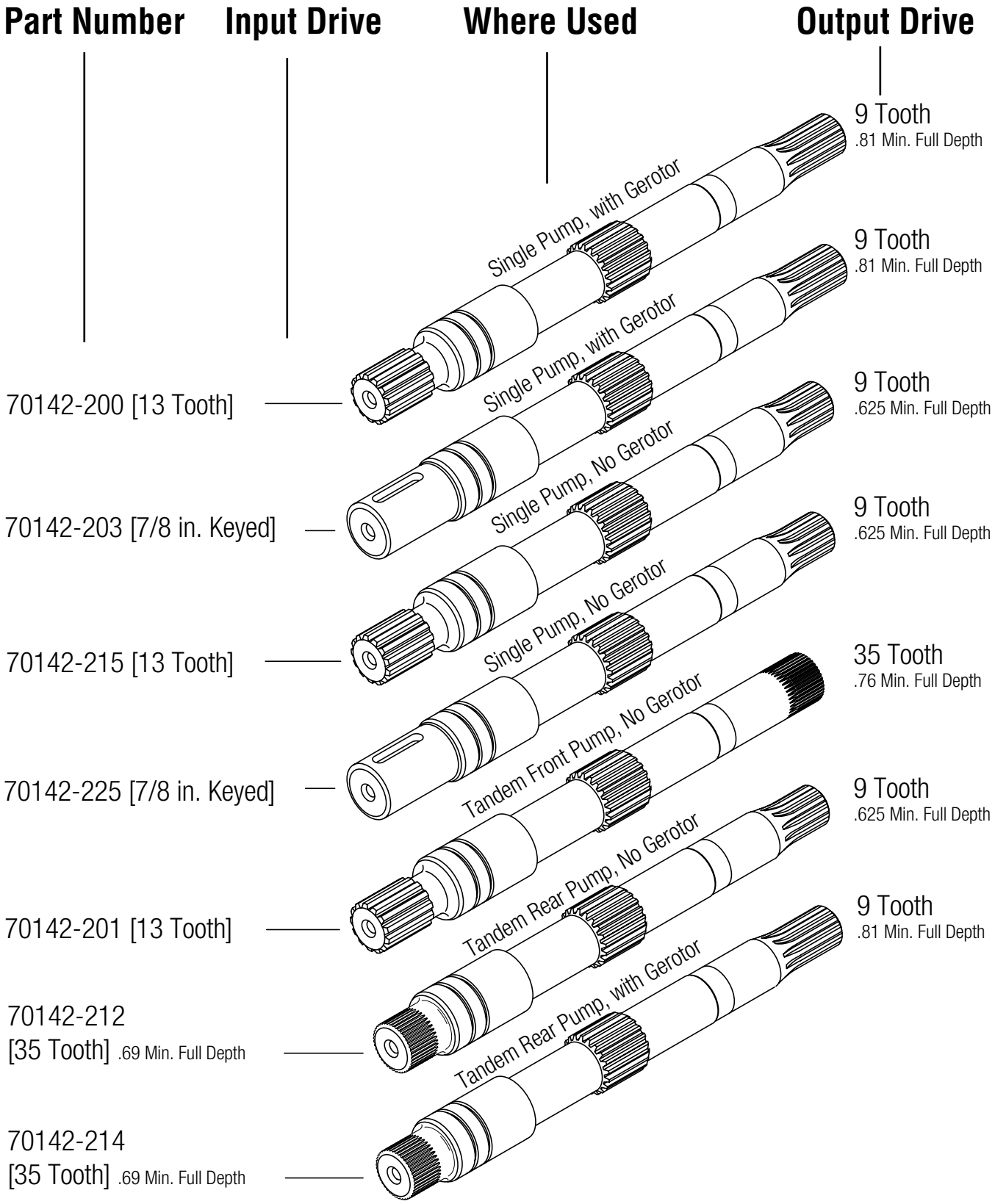

Item 2 -
Endcover Assembly Identification

Item 2 - Parts List (Refer to Identification chart and drawings)

Item	Part Number	Qty.	Description
2	See chart below		Endcover Assembly
2-1	70420-43	1	Bearing
2-2	16026-610	1	Roll Pin
2-3	16133-6	1	O-ring
2-4	70111-711	1	Charge Relief Housing
2-5	70111-507	1	Poppet Filter Relief
2-6	17000-48B	1	Spring (100-150 PSI)
2-7	16048-260	1	Washer
2-8	16077-10	1	Retaining Ring
2-9	70400-508	1	Bleed-off Valve Poppet
2-10	17023-12	1	Spring
2-11	16133-5	1	O-ring
2-12	70400-501	1	Cartridge

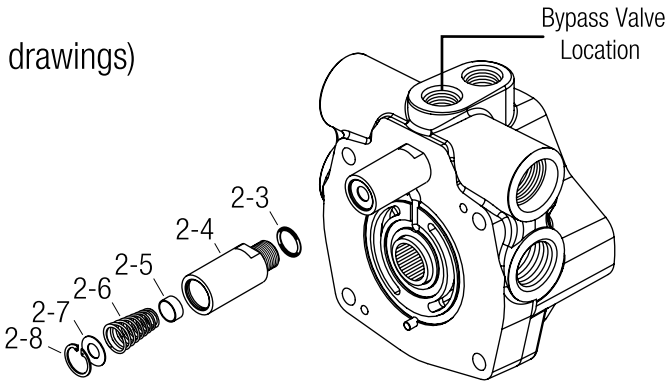

2(d)
Rear "A" Mount, Opposite Side Porting with Charge Relief

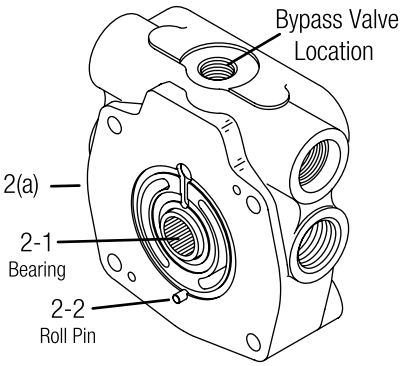

2(a)
Accepts Gerotor Charge Pump

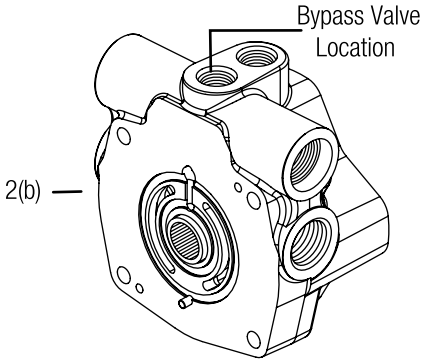

2(b)
Rear "A" Mount, Opposite Side Porting

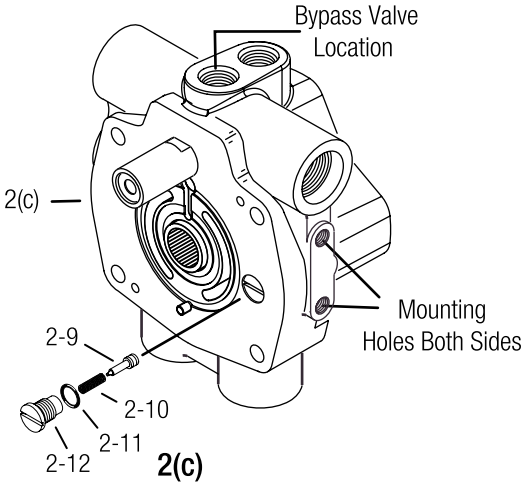

2(c)
Rear "A" Mount, Same Side Porting with Mounting Holes

Item 2 - Endcover Assembly Identification (Refer to drawings above)

Item	Part Number	Charge Pump	Main Port	Bypass Valve	Charge Relief to Case	Charge Relief Setting bar [PSI]	Special Feature
2(a)	113482-001	Yes	Opposite Sides*	Yes	No	----	----
2(b)	112157-009	No	Opposite Sides*	Yes	No	----	----
2(c)	112155-010	No	Same Side*	Yes	Yes	6,89-10,34 [100-150]	Bleed Off & Mounting Holes
2(d)	112157-008	No	Opposite Sides*	Yes	Yes	6,89-10,34 [100-150]	----

* Port Size: 1 1/16-12 UN-2B

Item 3 - Housing Assembly Identification

Item 3 -
Housing Assembly Identification

Item	Part Number	Port Machined
3	70160-307	D1 & D2
3	113077-001	D1, D2, & D4

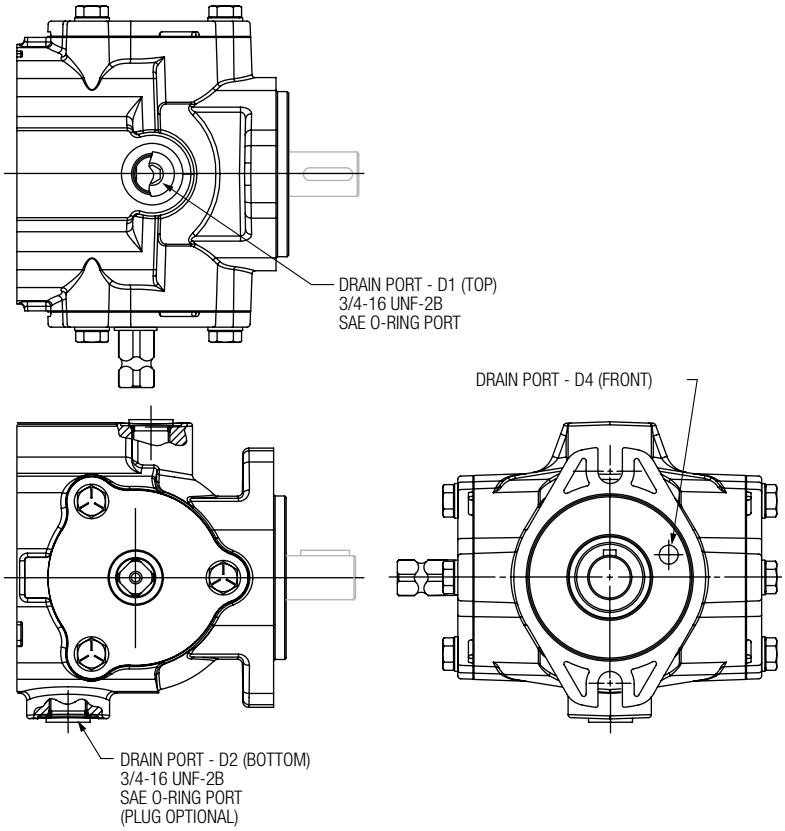

Item 4 - Rotating Kit Assembly

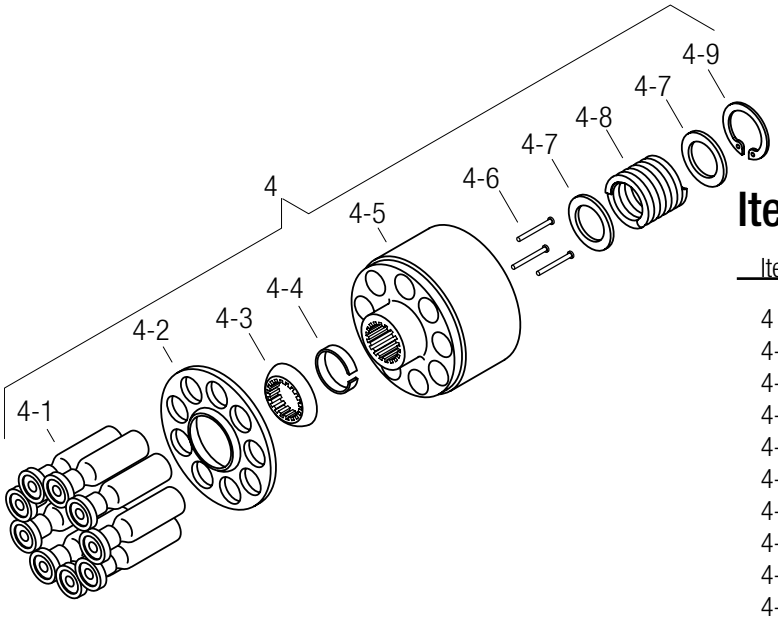

Item 4 - Rotating Kit Assembly

Item	Part Number	Qty.	Description
4	70111-692	1	Rotating Kit Assy.
4-1	NSS	9	Piston Assembly
4-2	NSS	1	Shoe Retainer
4-3	NSS	1	Shoe Retainer Pivot
4-4	NSS	1	Pin retainer
4-5	NSS	1	Cylinder Barrel
4-6	NSS	3	Pins
4-7	NSS	2	Washer
4-8	NSS	1	Spring
4-9	NSS	1	Retaining Ring
	NSS - Not Sold Separately		

Item 20 or 21 - Relief Valve

Item 20 or 21 -

Internal Relief Valve Settings Available

Part Number	bar [PSI]
110700-200	138 [2000]
110700-250	172 [2500]
110700-300	207 [3000]
110700-350	241 [3500]
110700-400	276 [4000]
110700-450	310 [4500]
110700-500	345 [5000]
110700-99	Seat, Valve

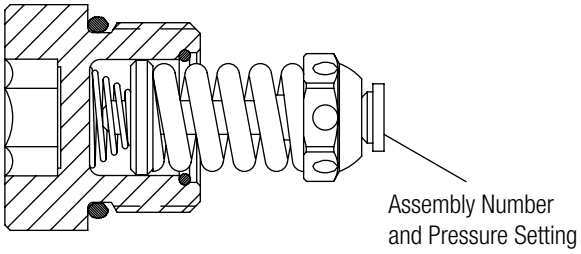

Item 48 - Valve Plate

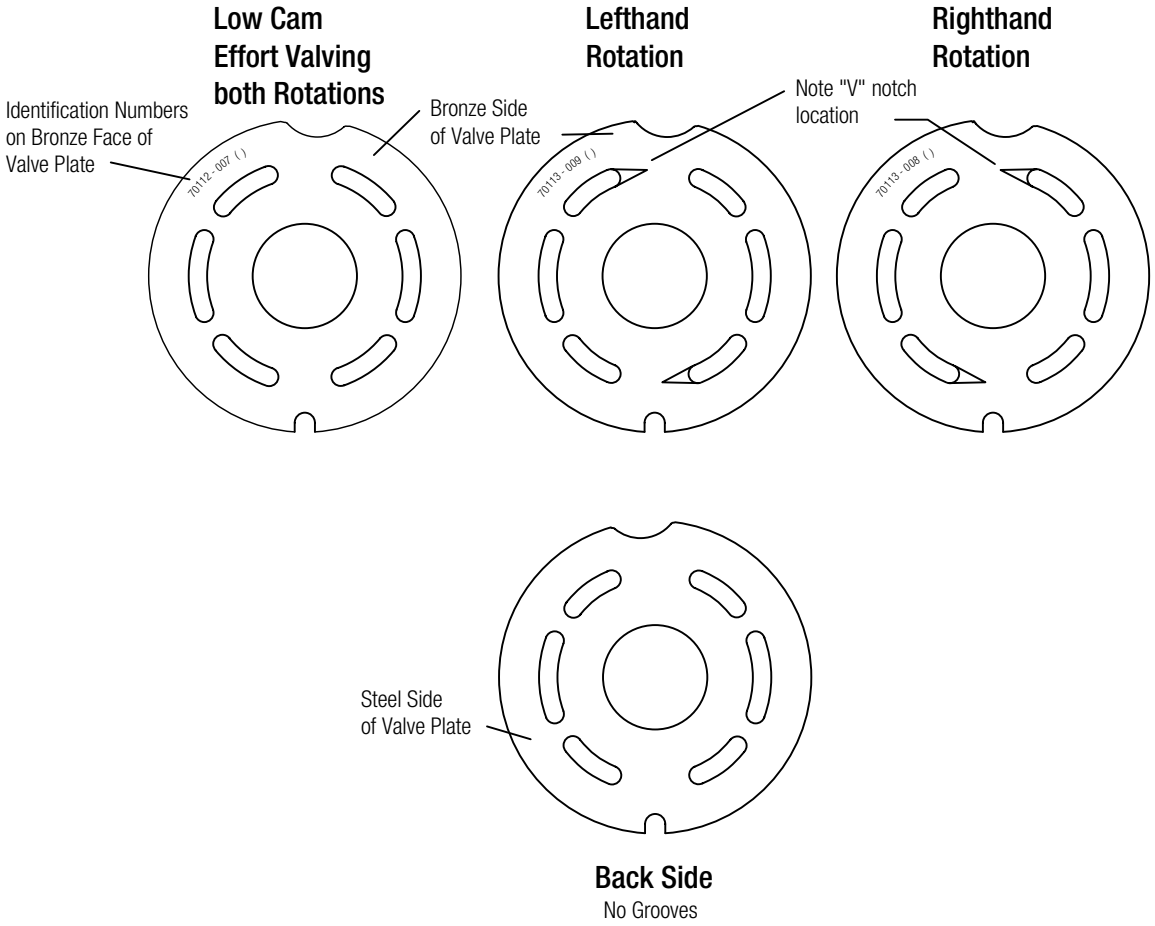

Item 36 -

Charge Pump Adapter Assembly Identification

Right Hand

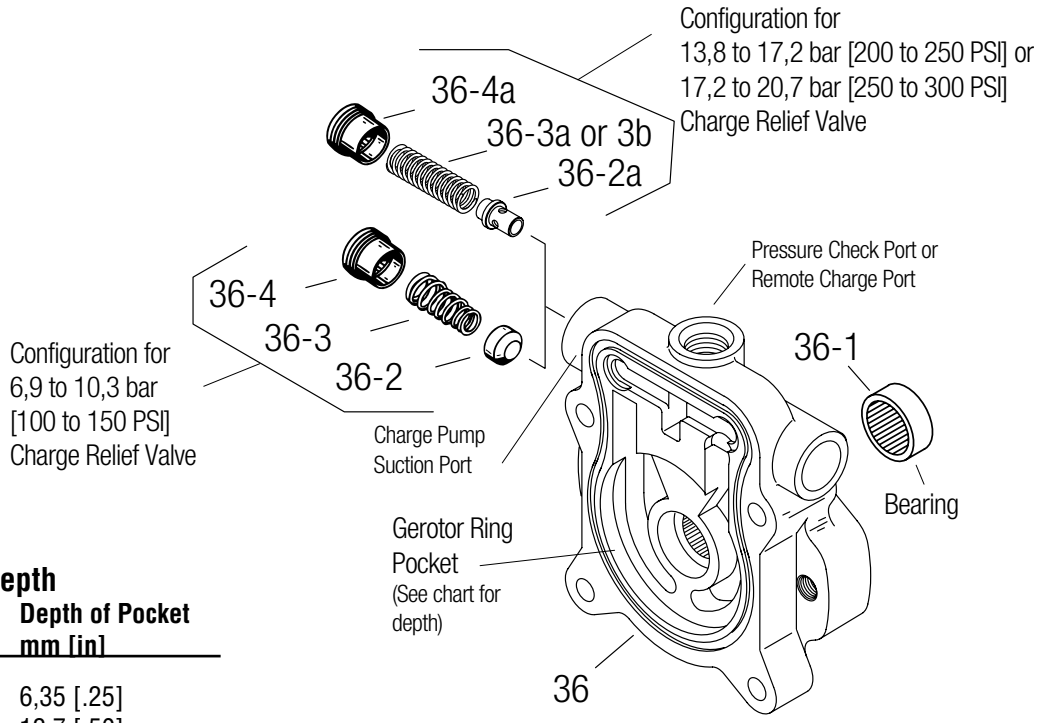

Gerotor Pocket Depth

Displacement cm^3/r [in^3/r]	Depth of Pocket mm [in]
6,9 [.42]	6,35 [.25]
13,8 [.84]	12,7 [.50]

Left Hand R

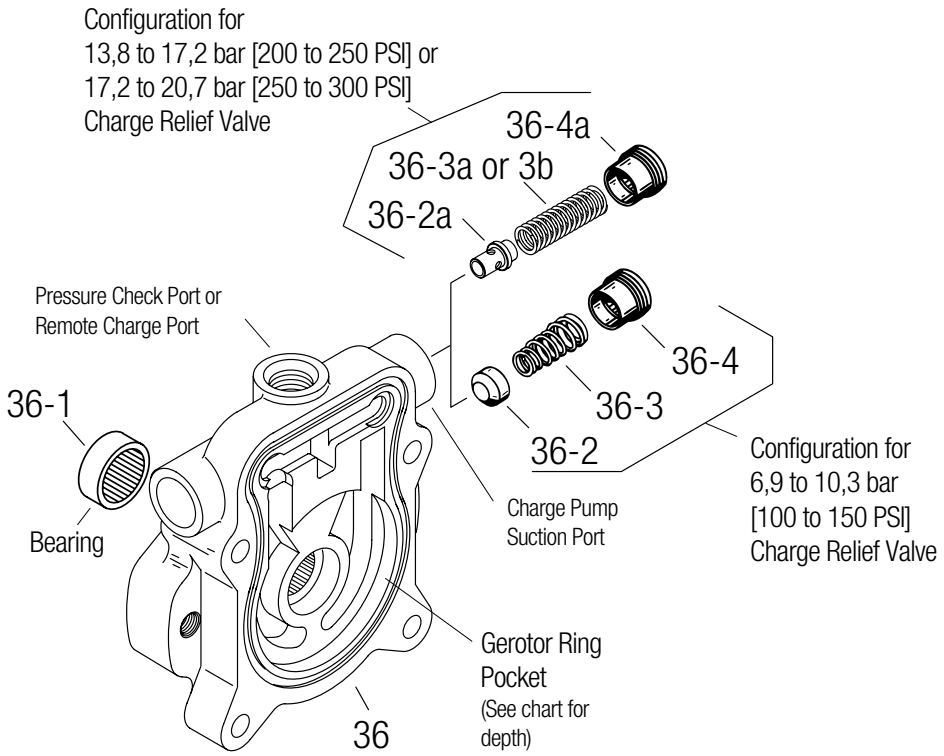

Item 36 -

Charge Pump Adapter Assembly

6,9 to 10,3 bar [100 to 150 PSI] Charge Relief Setting

Item	Part No.	Qty.	Description	Rotation	Displacement
36	70142-314	1	Assembly, Charge Pump Adapter	Righthand	6,88 cm^3/r [.42 in^3/r]
	70142-306	1	Assembly, Charge Pump Adapter	Lefthand	13,8 cm^3/r [.84 in^3/r]
	70141-397	1	Assembly, Charge Pump Adapter	Righthand	13,8 cm^3/r [.84 in^3/r]
	70142-359	1	Assembly, Charge Pump Adapter	Lefthand	6,88 cm^3/r [.42 in^3/r]
36-1	16239-1148	1	Bearing (press fit)		
36-2	70111-507	1	Poppet, Cup		
36-3	17000-48B	1	Spring, Tapered		
36-4	70400-505	1	Spring Retainer		

13,8 to 17,2 bar [200 to 250 PSI] Charge Relief Setting

Item	Part No.	Qty.	Description	Rotation	Displacement
36	70142-373	1	Assembly, Charge Pump Adapter	Lefthand	6,88 cm^3/r [.42 in^3/r]
	70142-377	1	Assembly, Charge Pump Adapter	Righthand	6,88 cm^3/r [.42 in^3/r]
	70142-380	1	Assembly, Charge Pump Adapter	Righthand	13,8 cm^3/r [.84 in^3/r]
	70142-385	1	Assembly, Charge Pump Adapter	Lefthand	13,8 cm^3/r [.84 in^3/r]
36-1	16239-1148	1	Bearing (press fit)		
36-2a	70400-685	1	Poppet, Pin		
36-3a	17056-40	1	Spring, Color "Light Green"		
36-4a	70400-512	1	Spring Retainer		

17,2 to 20,7 bar [250 to 300 PSI] Charge Relief Setting

Item	Part No.	Qty.	Description	Rotation	Displacement
36	70142-376	1	Assembly, Charge Pump Adapter	Righthand	6,88 cm^3/r [.42 in^3/r]
	70142-381	1	Assembly, Charge Pump Adapter	Lefthand	6,88 cm^3/r [.42 in^3/r]
	70142-386	1	Assembly, Charge Pump Adapter	Lefthand	13,8 cm^3/r [.84 in^3/r]
36-1	16239-1148	1	Bearing (press fit)		
36-2a	70400-685	1	Poppet, Pin		
36-3b	17056-41	1	Spring, Color "Pink"		
36-4a	70400-512	1	Spring Retainer		

Notes:

Notes:

Eaton
14615 Lone Oak Road
Eden Prairie, MN 55344
USA
Tel: 952 937-9800
Fax: 952 974-7722
www.hydraulics.eaton.com

Eaton
20 Rosamond Road
Footscray
Victoria 3011
Australia
Tel: (61) 3 9319 8222
Fax: (61) 3 9318 5714

Eaton
Dr.-Reckeweg-Str. 1
D-76532 Baden-Baden
Germany
Tel: (49) 7221 682-0
Fax: (49) 7221 682-788

Hydraulics

© 2004 Eaton Corporation
All Rights Reserved
Printed in USA
Document No. E-PUPI-TP003-E
June 2004