Eaton®
Heavy Duty Hydrostatics

Revised September, 1992

Parts Information

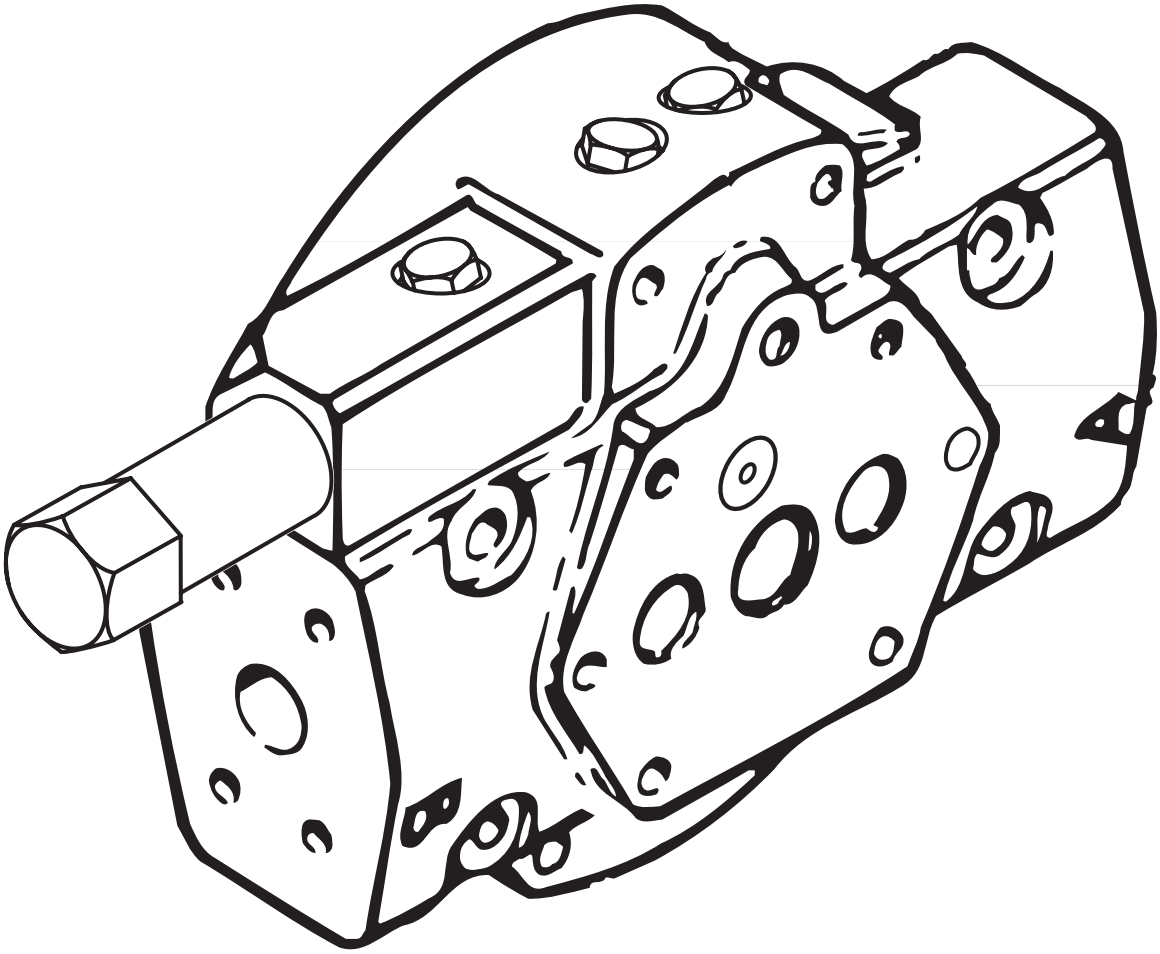

IPOR End Cover –
Models 3320 - 7620 and 3321 - 6421

IPOR End Cover S/A Number

Description Main Ports	3321	3921	4621	5421	6421
1 inch Code 61* S/A	103152	103152	105017	103100	105177
1 inch Code 62** S/A	104913	104913	104402	103466	105142

Description Main Ports	3320	3920	4620	5420	———	7620
1 inch Code 61* S/A	103152	103152	103036	103100	———	103155
1 inch Code 62** S/A	104913	104913	104102	103466	———	104186

* SAE Code 61 - Split Flange, 3000 PSI — 3/8-16 UNC 2B Thread Bolt
** SAE Code 62 - Split Flange, 6000 PSI — 7/16-14 UNC 2B Thread Bolt

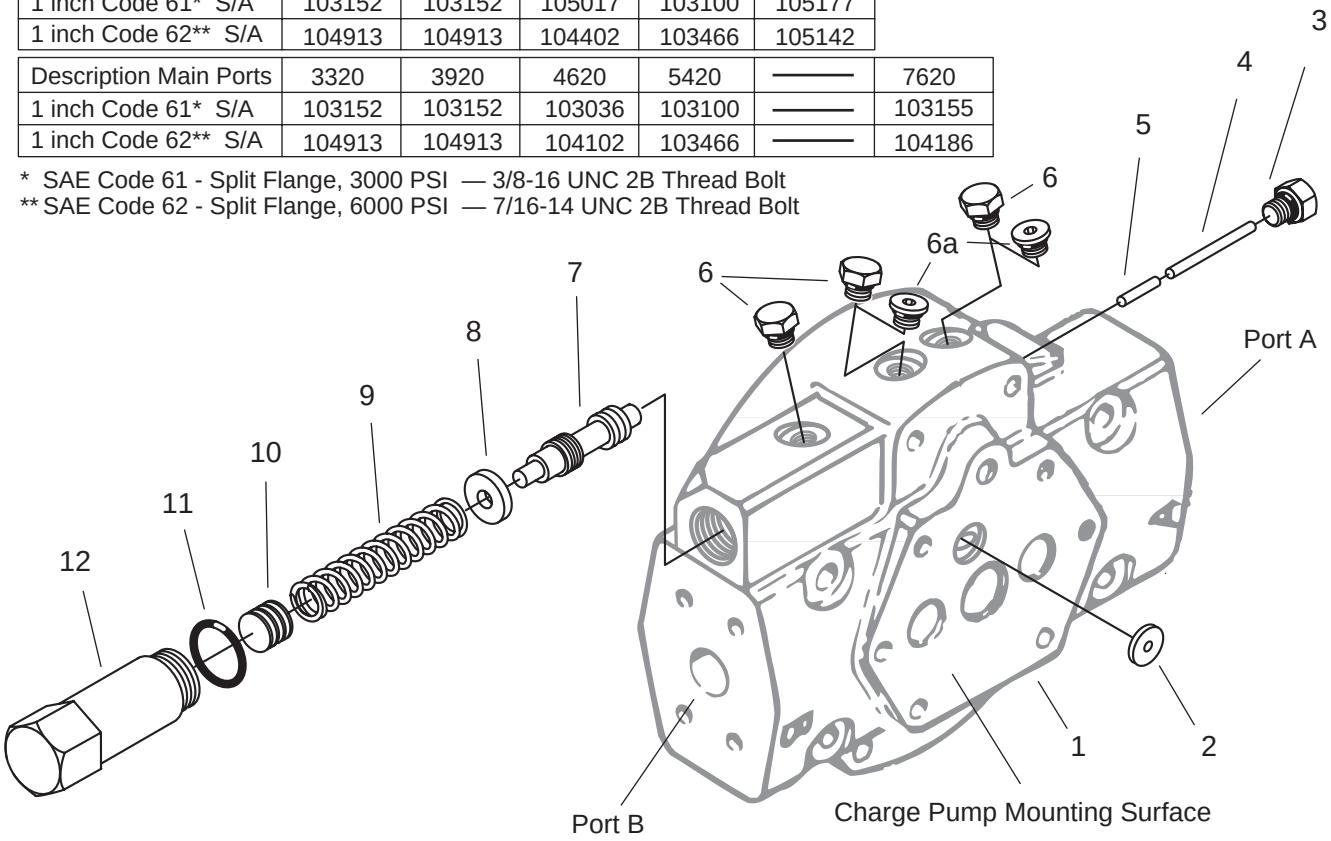

Ref. No.	Part Number Model 33	Model 39	Model 46	Model 54	Model 64	Model 76	Description	Qty.
1	NSS	NSS	NSS	NSS	NSS	NSS	End Cover	1
2	101619-XXX	101619-XXX	101619-XXX	101619-XXX	101619-XXX	101619-XXX	Orifice ***	1
3	25706-002	25706-002	25706-002	25706-002	25706-002	25706-002	Plug/O-ring	1
4	103039-138	103039-138	103039-138	103039-150	103039-150	103039-188	Needle Roller - 5/32 Dia.	1
5	103039-056	103039-056	103039-056	103039-088	103039-088	103039-088	Needle Roller - 5/32 Dia.	1
6	25090-002	25090-002	25090-002	25090-002	25090-002	25090-002	Plug/O-ring	3 or 1
6a	25083-002	25083-002	25083-002	———	———	25083-002	Plug/O-ring	2
7	103034	103034	103034	103034	103034	103034	Override Spool	1
8	103038	103038	103038	103038	103038	103038	Spring Spacer	1
9	104137	104137	104137	104137	104137	104137	Spring	1
10	990395-000	990395-000	990395-000	990395-000	990395-000	990395-000	Valve Shim Kit †	1
11	8785-010	8785-010	8785-010	8785-010	8785-010	8785-010	O-ring	1
12	103033	103033	103033	103033	103033	103033	Spring Box	1

NSS - Not Sold Separately
*** Orifice Dia. .028 .036 .044 .052 .057 .065 .073 .094 .102 Stake 6 Places on Outer Edge for Retention.
† The Pressure Range is Shim Adjustable from 1000 to 6000 PSI [69-414 Bar]
(Shim .018 = 500 PSI [.46 = 34 Bar])

Eaton
Fluid Power Group
Hydraulics Business USA
14615 Lone Oak Road
Eden Prairie, MN 55344
USA
Tel: 952-937-9800
Fax: 952-294-7722
www.eaton.com/hydraulics

Eaton
Fluid Power Group
Hydraulics Business Europe
Route de la Longeraie 7
1110 Morges
Switzerland
Tel: +41 (0) 21 811 4600
Fax: +41 (0) 21 811 4601

Eaton
Fluid Power Group
Hydraulics Business Asia Pacific
11th Floor Hong Kong New World Tower
300 Huaihai Zhong Road
Shanghai 200021
China
Tel: 86-21-6387-9988
Fax: 86-21-6335-3912

Powering Business Worldwide

© 2008 Eaton Corporation
All Rights Reserved
Printed in USA
Document No. E-PUPI-TP005-E
Supersedes 06-622
October 2008