EATON | Hydraulics

Electronic Proportional (EP) Control for Heavy Duty Series 0/1 Piston Pumps

Model 33 Model 54
Model 39 Model 64
Model 46 Model 76

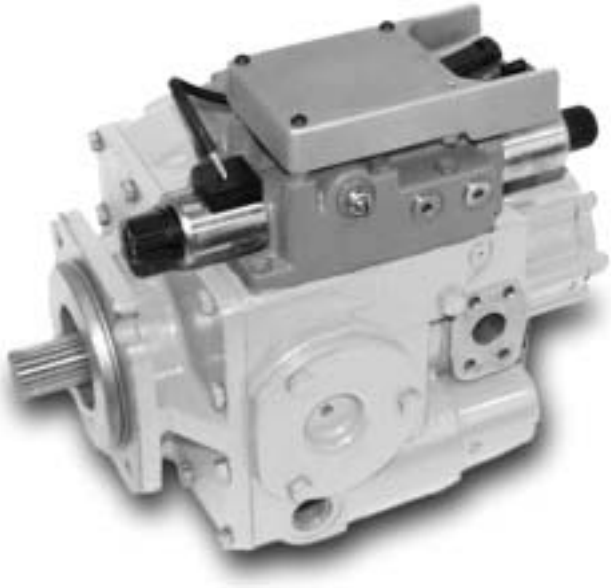

Table of Contents

Introduction 3
Identification of Components 4
Required Tools for Installation 4
EP Control Kits 5
Installation Dimensions 6
Disassembly 7
Reassembly 9
Neutral Adjustment 10
Interconnect Schematic 15
Troubleshooting 17
Troubleshooting Reference Settings 22

Information contained in this publication is accurate as of the publication date and is subject to change without notice. Performance values are typical values. Customers are responsible for selecting products for their applications using normal engineering methods.

Introduction

The following information describes the installation of the Electronic Proportional (EP) Control for Eaton® Heavy Duty Series 0/1 piston pumps. Review this information to become familiar with the procedures required before beginning any installation.

⚠CAUTION **In order to assure the most reliable installation and operation of any electronic control, proper component selection and installation procedures must be followed with respect to interconnection wiring harnesses, input command signal devices, fusing, and input power switching.**

Appropriate industry practices must be followed to prevent damage of and shorting of all electrical and electronic components caused by environmental hazards and application specific hazards. Typical hazards that damage the wiring harnesses or other components are abrasion, moving objects, and heat from the engine or exhaust system. Moisture can damage poorly sealed connectors and/or components, causing short circuits and other problems like corrosion.

A switch must be installed in line with (+ battery) power to the electronic module, so that power may quickly be disconnected in case of emergency (component failure or inadvertent commands). A fuse rated at the maximum module operating current (3 Amp) must be installed in the + battery line to the electronic module.

All the electrical connections to the EP Control electronic module must be disconnected prior to performing any electrical welding on the vehicle or machine. The electronic module and/or the hydraulic pump are not to be used as a connection point for electrical welding equipment.

During initial start-up and/or checkout of the machine after service, the machine must be placed on jack stands to prevent inadvertent movement.

The reliable operation and suitability of this product is dependent upon how it is applied and the other components used in the system. The system integrator must review all aspects of the application and all of the components used to assure proper operation and reliability.

Identification of Components

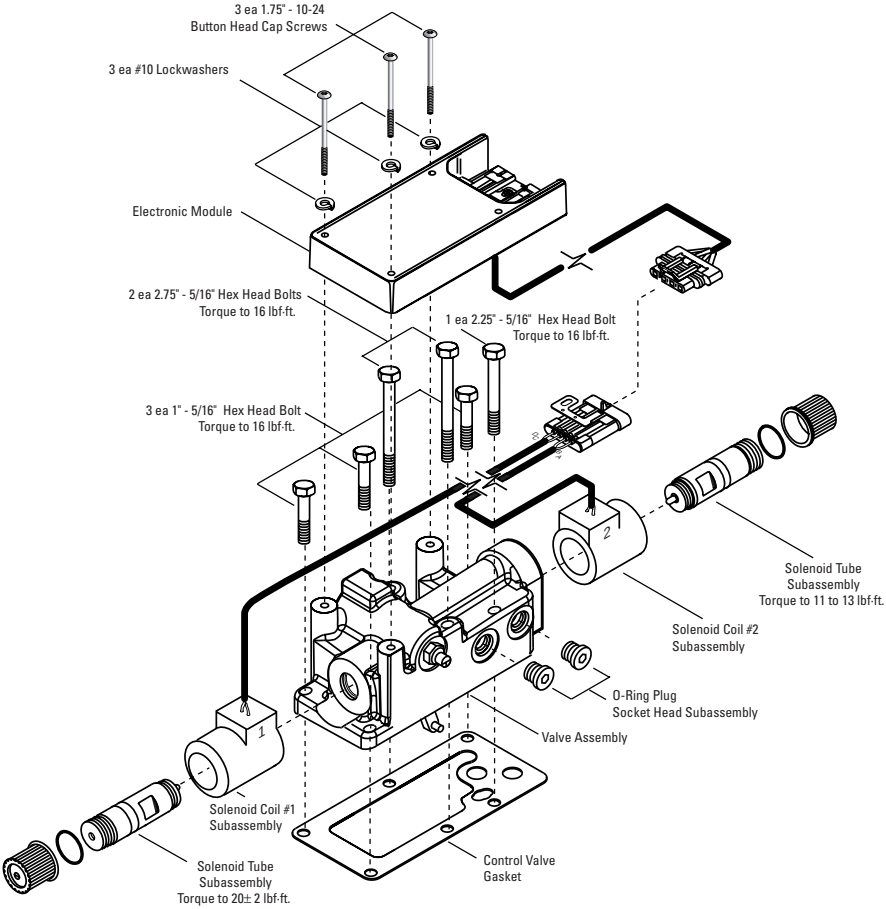

Required tools for Installation:

- 1/8" Bit Socket or Hex Key
- 1/2" Open-End Wrench or 1/2" Socket
- 9/16" Open-End Wrench
- 3/4" Open-End Wrench
- Flat Blade Screwdriver
- 12 VDC Power Supply or Battery
- Voltage Ohm Meter (VOM)
- Charge Pressure Gauge

EP Control Kits

KIT NO.	MODEL CODE REF.	KIT DESCRIPTION	INPUT SIGNAL	VALVE ASSEMBLY	ELECTRONIC MODULE	VOLTAGE
9900024-000	EL	EP Ctrl Kit HD Series 1 33/46: 1-6 V input	1-6 V	4993055-000	111520-016	12/24 V
9900026-000	EN	EP Ctrl Kit HD Series 1 33/46: ±4-20 mA input	±4-20 mA	4993055-000	111520-020	12/24 V
9900027-000	EL	EP Ctrl Kit HD Series 1 54/64: 1-6 V input	1-6 V	4993055-001	111520-016	12/24 V
9900029-000	EN	EP Ctrl Kit HD Series 1 54/64: ±4-20 mA input	±4-20 mA	4993055-001	111520-020	12/24 V
9900030-000	EL	EP Ctrl Kit HD Series 0 76: 1-6 V input	1-6 V	4993055-002	111520-016	12/24 V
9900032-000	EN	EP Ctrl Kit HD Series 0 76: ±4-20 mA input	±4-20 mA	4993055-002	111520-020	12/24 V
9900033-000	EJ	EP Ctrl Kit HD Series 1 33/46: 12 V coils w/o electronics	—	4993055-000	—	12 V
9900034-000	EJ	EP Ctrl Kit HD Series 1 54/64: 12 V coils w/o electronics	—	4993055-001	—	12 V
9900035-000	EJ	EP Ctrl Kit HD Series 0 76: 12 V coils w/o electronics	—	4993055-002	—	12 V
9900036-000	EK	EP Ctrl Kit HD Series 1 33/46: 24 V coils w/o electronics	—	4993055-003	—	24 V
9900037-000	EK	EP Ctrl Kit HD Series 1 54/64: 24 V coils w/o electronics	—	4993055-004	—	24 V
9900038-000	EK	EP Ctrl Kit HD Series 0 76: 24 V coils w/o electronics	—	4993055-005	—	24 V
990830-000		EP Crtl Electronic Module 1-6 V	1-6 V	—	111520-016	—
990832-000		EP Crtl Electronic Module ±4-20 mA	±4-20 mA	—	111520-020	—

Note: All kits using Eaton EP Control Electronic Modules use 12 V coils.

Installation Dimensions

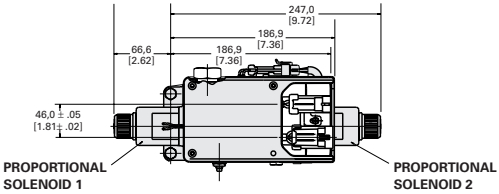

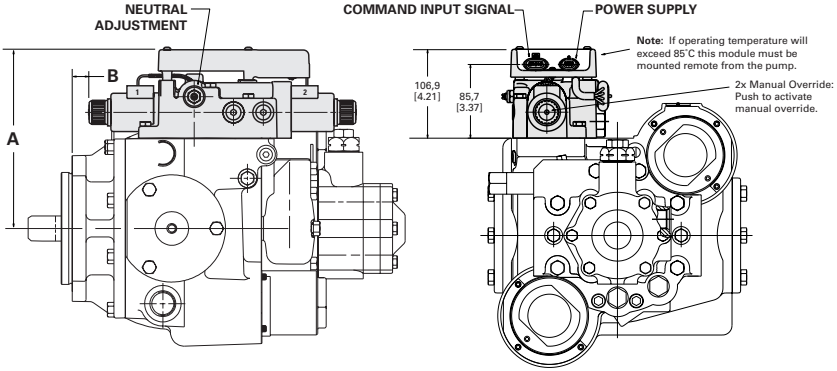

MODEL	DISPLACEMENT	DIM. A	DIM. B
33	54,34 cm^3/rev [3.316] in^3/rev	208,5 [8.21]	3,3 [.13]
39	63,66 cm^3/rev [3.885] in^3/rev	208,5 [8.21]	3,3 [.13]
46	75,28 cm^3/rev [4.594] in^3/rev	208,5 [8.21]	3,3 [.13]
54	89,13 cm^3/rev [5.439] in^3/rev	221,2 [8.71]	21,6 [.85]
64	105,4 cm^3/rev [6.431] in^3/rev	221,2 [8.71]	21,6 [.85]
76	124,8 cm^3/rev [7.616] in^3/rev	230,9 [9.09]	38,6 [1.52]

Disassembly

Step 1

Clean the pump thoroughly. If conversion will be performed without removing the pump from machine, case fluid level will need to be lowered below EP Control mounting surface. If only replacing the electronic module, skip to Step 9.

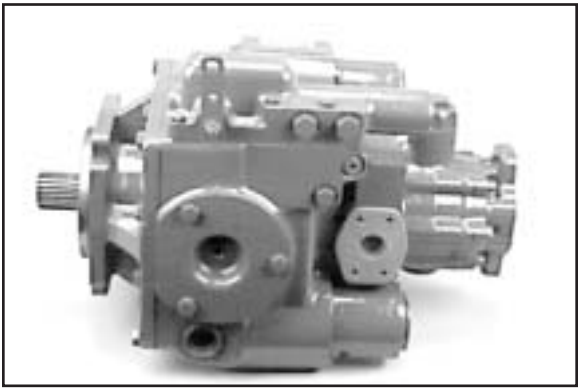

Step 2

Remove the manual displacement control. Using a 1/2" socket or open-end wrench, remove the retaining screws and discard.

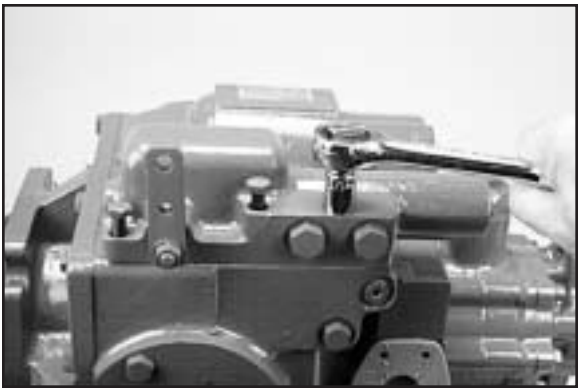

Step 3

Carefully lift the manual displacement control upward and slide away from the pump to disengage the feedback link from the swashplate link.

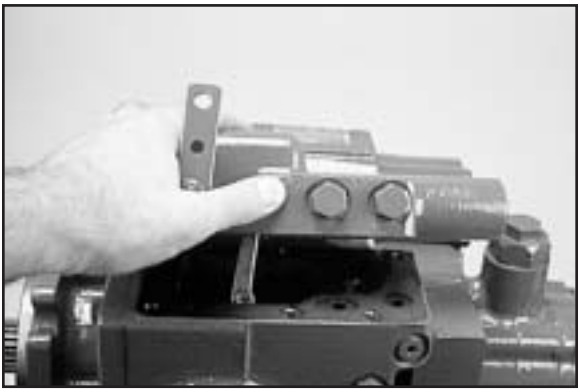

Step 4

Remove the control valve gasket from the pump housing and discard.

Reassembly

Step 5

Locate the EP Control valve assembly, electronic module, bolts, washers and gasket. Refer to page 4 for identification of parts. Clean the mounting surface and install a new control valve gasket by aligning with bolt and porting holes.

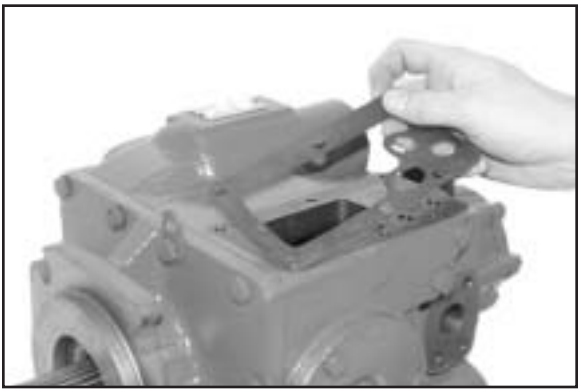

Step 6

Carefully install the EP Control valve assembly on the pump housing, using a sideways motion to insert the feedback link into the swashplate link and aligning the control.

Step 7

Use a 1/2" open-end wrench or socket to install the six 5/16"-18 hex head retaining bolts. Torque the bolts to 16 lbf·ft. **Note:** There are three different bolt lengths. Refer to page 4 for identification.

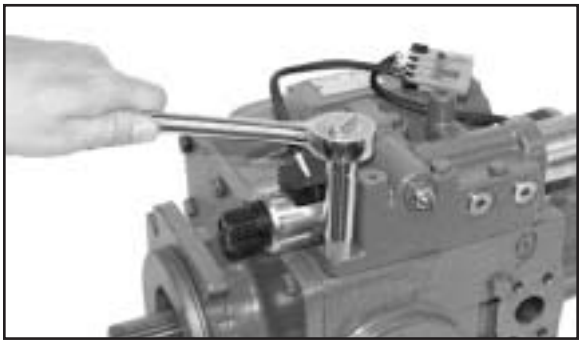

Step 8

Caution: All hoses and fittings must be connected, and the pump ready for operation before attempting to check neutral adjustment. Electrical wiring harnesses for the solenoid coils and command input should be left disconnected while adjusting neutral.

A. Disengage the input drive to vehicle or elevate wheels.

B. Install charge pressure gauge. A 0-1000 psi or 0-1500 psi pressure gauge is recommended.

C. Start the prime mover.

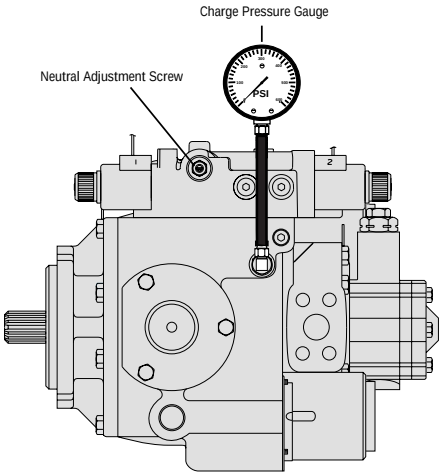

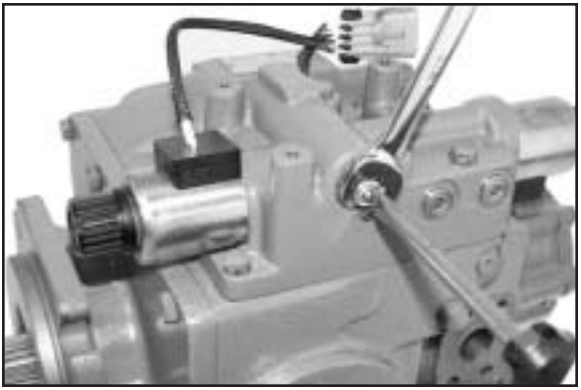

D. Loosen the locknut holding the neutral adjustment screw until it is just snug enough that the threaded screw can be rotated. Use a 9/16" end wrench to hold the locking nut while rotating the neutral adjustment screw.

E. Note the number stamped on the cap of the low pressure relief valve. -022 is 220 psig (15 bar), -030 is 305 psig (21 bar), etc. This will be the high setting. Settings can vary from 220 psig (15 bar) to 410 psig (28 bar).

F. Slowly rotate the neutral adjustment screw clockwise until charge pressure drops to its low setting. Mark the neutral adjustment screw location.

Note: The charge pressure low setting is usually 40-60 psig lower than the high setting.

G. Rotate the neutral adjustment screw counterclockwise. The charge pressure will rise. Continue turning counterclockwise until the pressure drops again to its low setting. Mark the neutral adjustment screw location.

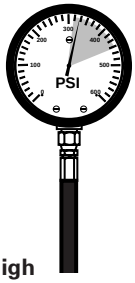

High Setting Range

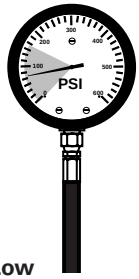

Low Setting Range

H. Rotate the neutral adjustment screw to the position between the two marks.

I. Carefully hold adjustment screw while torquing locknut. Torque locknut to 10±1 lbf·ft. Neutral adjustment is completed.

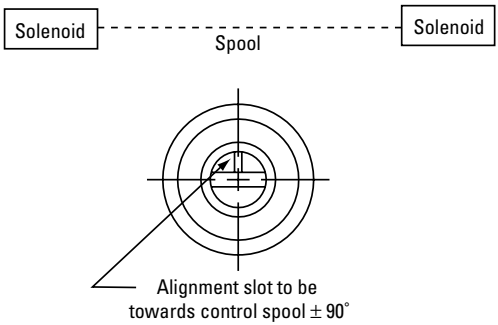

Step 9

Carefully position the EP Control electronic module, tucking all cables under the module. **Caution:** Avoid pinching cables at mounting points.

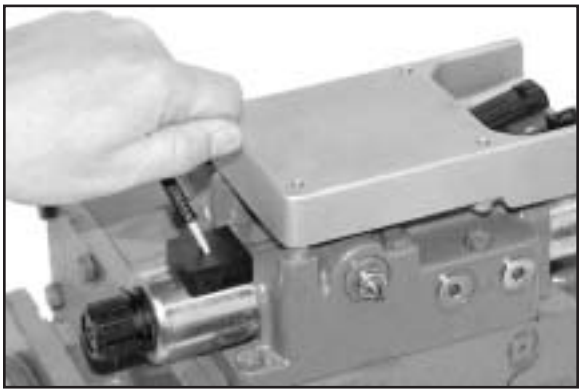

Step 10

Position the clip on the cable from the solenoid coils between the mounting post and the electronic module.

Install one lockwasher and 10-24 button head cap screw through the electronic module and the cable clip and into the valve assembly.

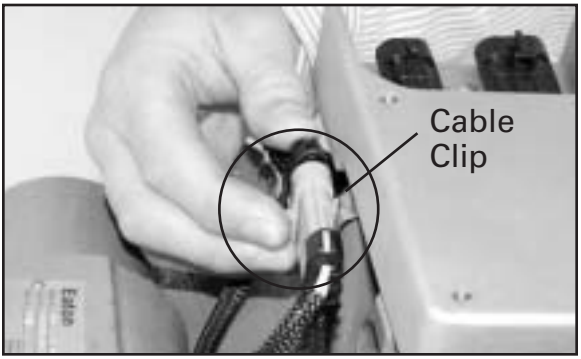

Step 11

Install the two remaining lockwashers and 10-24 button head cap screws. Torque the three screws to 40-48 lbf·in.

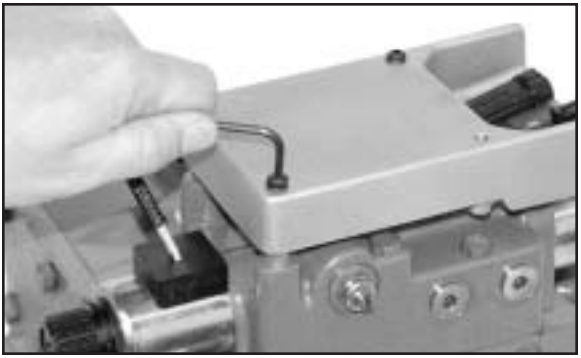

Step 12

Connect the four-pin mating connectors of EP Control electronic module and the solenoid coils. The connectors must be latched securely.

Step 13

Power should still be disconnected to the input device. Connect the command input device to the three-pin connector on the EP Control electronic module.

Step 14

Connect the electrical power source to the two-pin connector on the EP Control electronic module. Install a 3 Amp SLO-BLO® fuse. Refer to the Interconnect Schematic on page 15.

Recheck your work and then reconnect the power to the vehicle or system.

Step 15

The pump is now ready to return to operation.

Interconnect Schematic

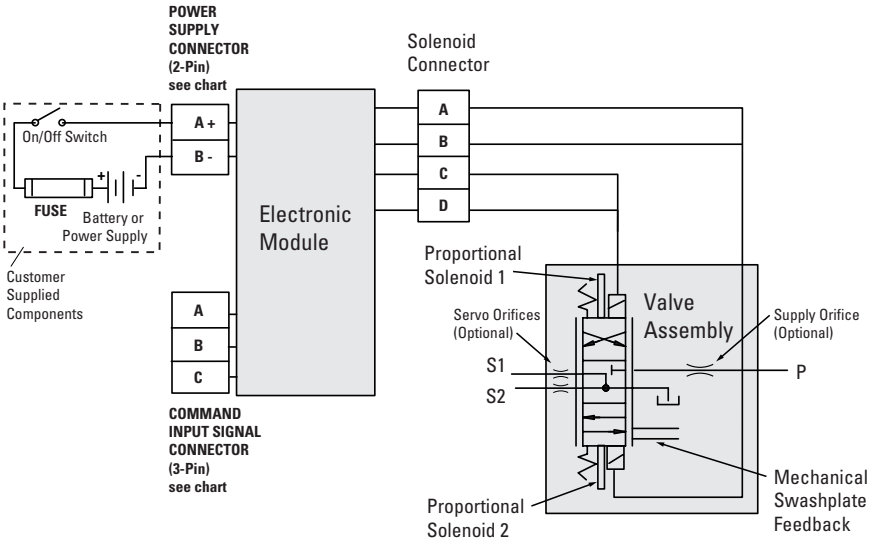

Command Input Signal Connector

COMMAND INPUT SIGNAL	PINS	WIRE COLOR	SIGNAL
1 to 6 Vdc Potentiometric	A	Black	Ref Low - 1 Vdc
	B	Green	Command (wiper)
	C	Red	Ref Hi - 6 Vdc
4 to 20 mA Current Loop	A	Orange	Loop Return
	B	White	Loop In
	C	No Connection Required*	

*EP Control Electronic Module Mating Connector Kit 990762-000 contains plug used to seal mating end connector.

Power Supply Connector

PINS	WIRE COLOR	SIGNAL
A	Red	+ Supply Voltage
B	Black	Supply Return

Fuse Rating

3 Amp SLO-BLO® (Time Delay) fuse for 12-24 Vdc system - customer supplied

Pump Displacement vs. Input Signal

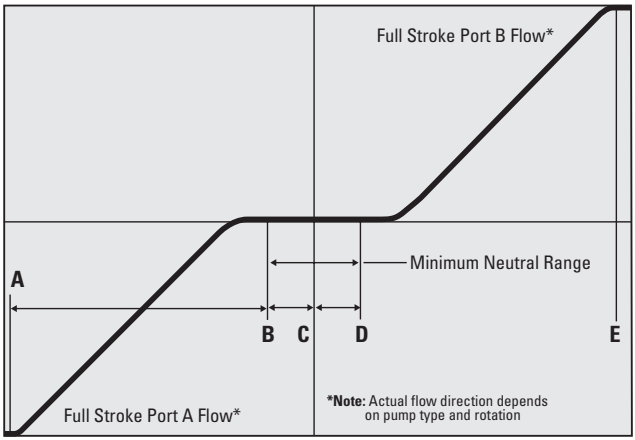

Typical Control Characteristics

	A (MAX)	B (MIN)	C	D (MIN)	E (MAX)
Command Input Signal					
1-6 Vdc	1.5 Vdc	3.3 Vdc	3.5 Vdc	3.7 Vdc	5.5 Vdc
±4-20 mA	-20 mA	-4.5 mA	0 mA	+4.5 mA	+20 mA
Shaft Rotation					
CCW	Solenoid #2		Neither	Solenoid #1	
	Flow OUT port "B"		No flow	Flow OUT port "A"	
CW	Solenoid #2		Neither	Solenoid #1	
	Flow OUT port "A"		No Flow	Flow OUT port "B"	

Note: The +20 mA command input signal configuration operates the pump in one direction. The customer has to change the polarity on the -20 mA signal to operate the pump in the opposite direction.

Troubleshooting

SYMPTOM	CAUSE	ACTION
No Flow in Either Direction	Defective Power Connection, or Loose Wires	Check Power Input. Disconnect the two-pin power supply connector from the EP Control electronic module. Inspect the two connectors for corrosion, loose wires or broken wires. Measure the DC voltage across pins “A” and “B” at the connector. The reading should be between 9 to 30 Vdc.
	Command Signal Missing	Check Command Input Signal. Disconnect the three-pin command input device connector from EP Control electronic module. Inspect the two connectors for corrosion, loose contacts, loose wires and broken wires. If 1-6 Vdc joystick or potentiometer is used, measure the DC voltage across pins “A” and “B” at the connector. Move the joystick or potentiometer position. The voltage reading will be approximately 2.5 volts DC at joystick neutral or the half range position of the potentiometer. The DC voltage will be approximately 5 volts at one end of the joystick or potentiometer travel. At the opposite end of travel the DC voltage will be approximately zero. If ±4-20 mA current loop input is used, measure the DC voltage across pins “A” and “B” at the connector. The DC voltage reading should be approximately zero at zero input current which occurs at command input neutral. The DC voltage reading should be approximately ±5 volts for input command currents of ±20 mA respectively.
	Defective Solenoid Coil	Check Solenoid Coil. Disconnect the two-pin power supply and the three-pin command input device connectors from the EP Control electronic module. Inspect the connectors for corrosion, loose contacts, loose wires and broken wires. Remove the EP Control electronic module. Reverse Steps 9-12 on pages 12 and 13. Disconnect the two mating four-pin connectors. Measure the coil resistance across the designated pins at the solenoid four-pin connector. Refer to the Solenoid 4-pin Connector chart on page 21 for typical readings.
	Defective Electronic Module	Check Electronic Module. Disconnect the two-pin power supply and the three-pin command input device connectors from the EP Control electronic module. Inspect the connectors for corrosion, loose contacts, loose wires and broken wires. Remove the EP Control electronic module. Reverse Steps 9-12 on pages 12 and 13. **Caution:** The engine or motor driving the pump should not be running. Connect command input device and power to the module. Measure the current to the coil at the four-pin connector. Activate the input device end to end and at neutral. Monitor the current on one coil, and then on the other. Refer to Command Input Device chart on page 21 for typical readings.

SYMPTOM	CAUSE	ACTION
No FLow in Either Direction (con't)	Manual Override Does Not Function	Check Manual Override. Disconnect two-pin power supply and the three-pin command input device connectors from the EP Control electronic module. Inspect the connectors for corrosion loose contacts, loose wires and broken wires. Remove the valve assembly. Reverse instructions on page 9. Use a small Phillips screwdriver to push on the manual override of the solenoid tube's solenoid tube actuator pin.
Flow Only in One Direction	Command Signal Incorrect	Check Command Input Signal. Disconnect the three-pin command input device connector from the EP Control electronic module. Inspect the two connectors for corrosion, loose contacts, loose wires and broken wires. If 1-6 Vdc joystick or potentiometer is used, measure the DC voltage across pins "A" and "B" at the connector. Move the joystick or potentiometer position. The voltage reading will be approximately 2.5 volts DC at joystick neutral or the half range position of the potentiometer. The DC voltage will be approximately 5 volts at one end of the joystick or potentiometer travel. At the opposite end of travel the DC voltage will be approximately zero. If ±4-20 mA current loop input is used, measure the DC voltage across pins "A" and "B" at the connector. The DC voltage reading should be approximately zero at zero input current which occurs at command input neutral. The DC voltage reading should be approximately ±5 volts for input command currents of ±20 mA respectively.
	Defective Solenoid Coil	Check Solenoid Coil. Disconnect the two-pin power supply and the three-pin command input device connectors from the EP Control electronic module. Inspect the connectors for corrosion, loose contacts, loose wires and broken wires. Remove the EP Control electronic module. Reverse Steps 9-12 on pages 12 and 13. Disconnect the two mating four-pin connectors. Measure the coil resistance across the designated pins at the solenoid four-pin connector. Refer to the Solenoid 4-pin Connector chart on page 21 for typical readings.
	Defective Solenoid Tube Subassembly	Check Solenoid Tube Subassembly. Disconnect the two-pin power supply and the three-pin command input device connectors from the EP Control electronic module. Inspect the connectors for corrosion, loose contacts, loose wires and broken wires. Remove the two solenoid tube subassemblies. Visually inspect the actuator pin in the tube subassembly. The pin should be free to move.

SYMPTOM	CAUSE	ACTION
Flow Only in One Direction (con't)	Defective Electronic Module	Check Electronic Module. Disconnect the two-pin power supply and the three-pin command input device connectors from the EP Control electronic module. Inspect the connectors for corrosion, loose contacts, loose wires and broken wires. Remove the EP Control electronic module. Reverse Steps 9-12 on pages 12 and 13. **Caution:** The engine or motor driving the pump should not be running. Connect command input device and power supply to the electronic module. Measure the current to the coil at the four-pin connector. Activate the input device end to end and at neutral. Monitor the current on one coil, and then on the other. Refer to Command Input Device chart on page 21 for typical readings.
Flow in Neutral	Command Signal Incorrect	Check Command Input Signal. Disconnect the three-pin command input device connector from the EP Control electronic module. Inspect the two connectors for corrosion, loose contacts, loose wires and broken wires. If 1-6 Vdc joystick or potentiometer is used, measure the DC voltage across pins "A" and "B" at the connector. Move the joystick or potentiometer position. The voltage reading will be approximately 2.5 volts DC at joystick neutral or the half range position of the potentiometer. The DC voltage will be approximately 5 volts at one end of the joystick or potentiometer travel. At the opposite end of travel the DC voltage will be approximately zero. If ±4-20 mA current loop input is used, measure the DC voltage across pins "A" and "B" at the connector. The DC voltage reading should be approximately zero at zero input current which occurs at command input neutral. The DC voltage reading should be approximately ±5 volts for input command currents of ±20 mA respectively.
	Neutral Out of Adjustment	Check Neutral Adjustment. Disconnect the two-pin power supply and the three-pin command input device connectors from the EP Control electronic module. Inspect the connectors for corrosion, loose contacts, loose wires and broken wires. Remove the EP Control electronic module. Reverse Steps 9-12 on pages 12 and 13. Disconnect the two four-pin solenoid connectors. Follow instructions for setting neutral on page 10 Step 8.
Flow Limited, Cannot Achieve Full Pump Stroke	Command Signal	Check Command Input Signal. Disconnect the three-pin command input device connector from the EP Control electronic module. Inspect the two connectors for corrosion, loose contacts, loose wires and broken wires. If 1-6 Vdc joystick or potentiometer is used, measure the DC voltage across pins "A" and "B" at the connector. Move the joystick or potentiometer position. The voltage reading will be approximately 2.5 volts DC at joystick neutral or the half range position of the potentiometer. The DC voltage will be approximately 5 volts at one end of the joystick or potentiometer travel. At the opposite end of travel the DC voltage will be approximately zero.

SYMPTOM	CAUSE	ACTION
Flow Limited, Cannot Achieve Full Pump Stroke (con't)	Command Signal Incorrect	If ±4-20 mA current loop input is used, measure the DC voltage across pins "A" and "B" at the connector. The DC voltage reading should be approximately zero at zero input current which occurs at command input neutral. The DC voltage reading should be approximately ±5 volts for input command currents of ±20 mA respectively.
	Defective Electronic Module	Check Electronic Module. Disconnect the two-pin power supply and the three-pin command input device connectors from the EP Control electronic module. Inspect the connectors for corrosion, loose contacts, loose wires and broken wires. Remove the EP Control electronic module. Reverse Steps 9-12 on pages 11 and 12. **Caution:** The engine or motor driving the pump should not be running. Connect command input device and power supply to the electronic module. Measure the current to the coil at the four-pin connector. Activate the input device end to end and at neutral. Monitor the current on one coil, and then on the other. Refer to Command Input Device chart on page 21 for typical readings.
	Manual Override Does Not Function	Check Manual Override. Disconnect the two-pin power supply and the three-pin command input device connectors from the EP Control electronic module. Inspect the connectors for corrosion loose contacts, loose wires and broken wires. Remove the valve assembly. Reverse instructions on page 8. Use a small Phillips screwdriver to push on the manual override of the solenoid tube's actuator pin should move the spool.
Does Not Return to Neutral	Command Signal Incorrect	Check Command Input Signal. Disconnect the three-pin command input device connector from the EP Control electronic module. Inspect the two connectors for corrosion, loose contacts, loose wires and broken wires. If 1-6 Vdc joystick or potentiometer is used, measure the DC voltage across pins "A" and "B" at the connector. Move the joystick or potentiometer position. The voltage reading will be approximately 2.5 volts DC at joystick neutral or the half range position of the potentiometer. The DC voltage will be approximately 5 volts at one end of the joystick or potentiometer travel. At the opposite end of travel the DC voltage will be approximately zero. If ±4-20 mA current loop input is used, measure the DC voltage across pins "A" and "B" at the connector. The DC voltage reading should be approximately zero at zero input current which occurs at command input neutral. The DC voltage reading should be approximately ±5 volts for input command currents of ±20 mA respectively.
	Neutral Out of Adjustment	Check Neutral Adjustment. Disconnect the two-pin power supply and the three-pin connectors from the EP Control electronic module. Inspect the connectors for corrosion, loose contacts, loose wires and broken wires. Remove the EP Control electronic module. Reverse Steps 9-12 on pages 11 and 12. Disconnect the two solenoid four-pin connectors. Follow instructions for setting neutral on page 9 Step 8.

Troubleshooting Reference Settings

Solenoid 4-Pin Connector

PINS	SOLENOID	12 VOLT COIL	24 VOLT COIL
A & B	Coil 1	5 ohms	21 ohms
C & D	Coil 2	5 ohms	21 ohms
Note: Only 12 volt coils are used with EP Control electronics module			

Joystick Position

	DC VOLTAGE MEASURED ACROSS DESIGNATED PINS AT THE CUSTOMER THREE-PIN CONNECTOR
	A to B
Full-Forward	5 Vdc
Neutral	2.5 Vdc
Full-Reverse	0 Vdc

Command Input Device – 12/24 Volt Systems (5 Ω coils)

	CURRENT TO COIL 1 PINS A & B YELLOW & WHITE WIRES	CURRENT TO COIL 2 PINS C & D ORANGE & BLACK WIRES
Max command in one direction	Minimum 1.5 A Maximum 2.0 A	0 A 0 A
Neutral	0 A	0 A
Max command in the same direction	0 A 0 A	Minimum 1.5 A Maximum 2.0 A

Notes:

Notes:

Eaton
14615 Lone Oak Road
Eden Prairie, MN 55344
Telephone: 952 937-9800
Fax: 952 974-7130
www.hydraulics.eaton.com

Eaton
20 Rosamond Road
Footscray
Victory 3011
Australia
Tele: (61) 3 9319 8222
Fax: (61) 3 9318 5714

Eaton
46 New Lane, Havant
Hampshire PO9 2NB
England
Tele: (44) 23 92 486 451
Fax: (44) 23 92 487 110

© 2002 Eaton Corporation
All Rights Reserved
Printed in USA
Document No. E-PUPI-TI004-E
Supersedes 04-10-0001-EN-0901
September 2002

EATON | Hydraulics