Service Data

Vickers®

Piston Pumps

Heavy Duty Piston Pump

PVE27*-E2-21-C**-20

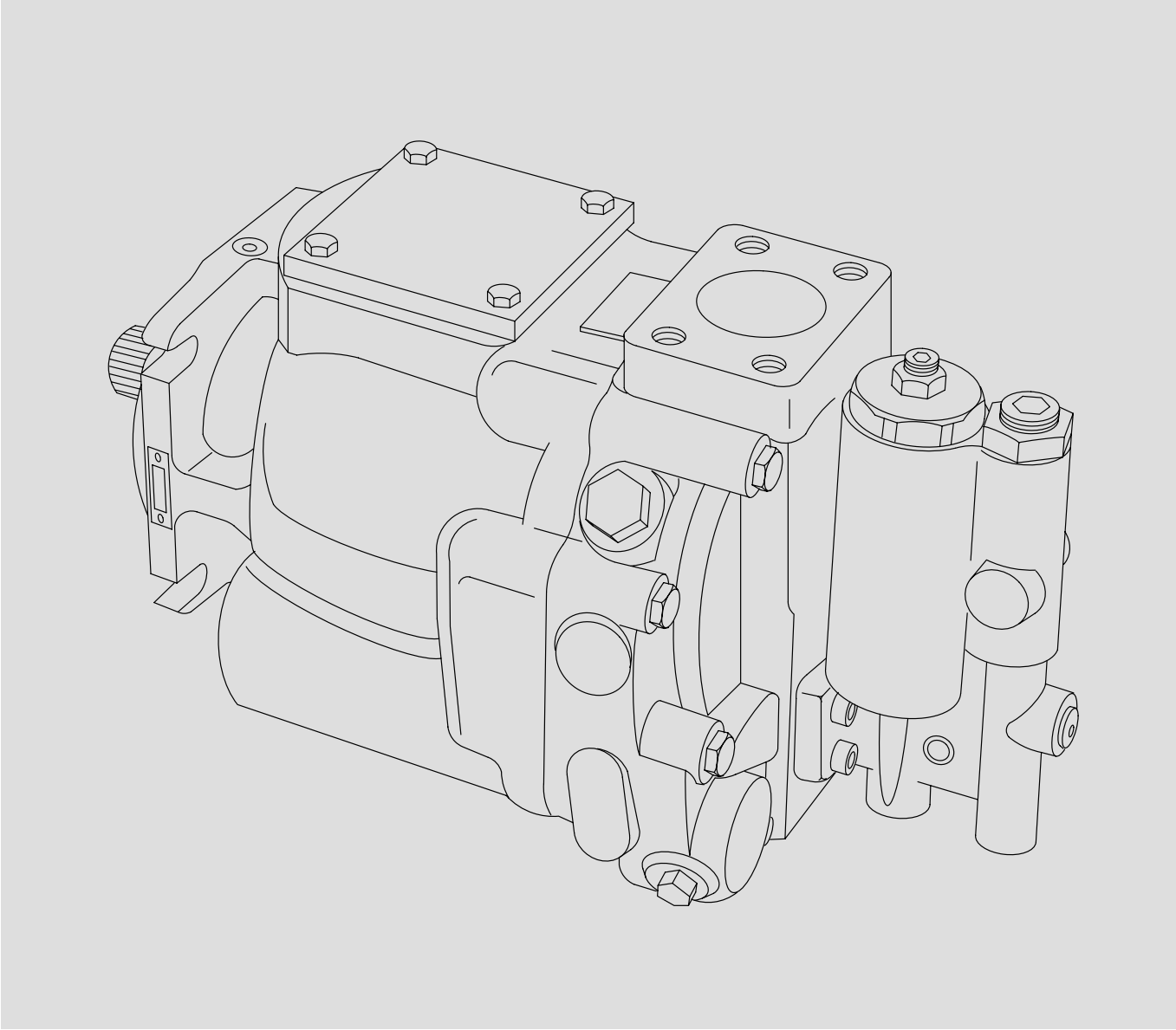

Revised 4/1/85

M-2241-S

676584 'C' Pressure compensator S/A preset at 250 bar.

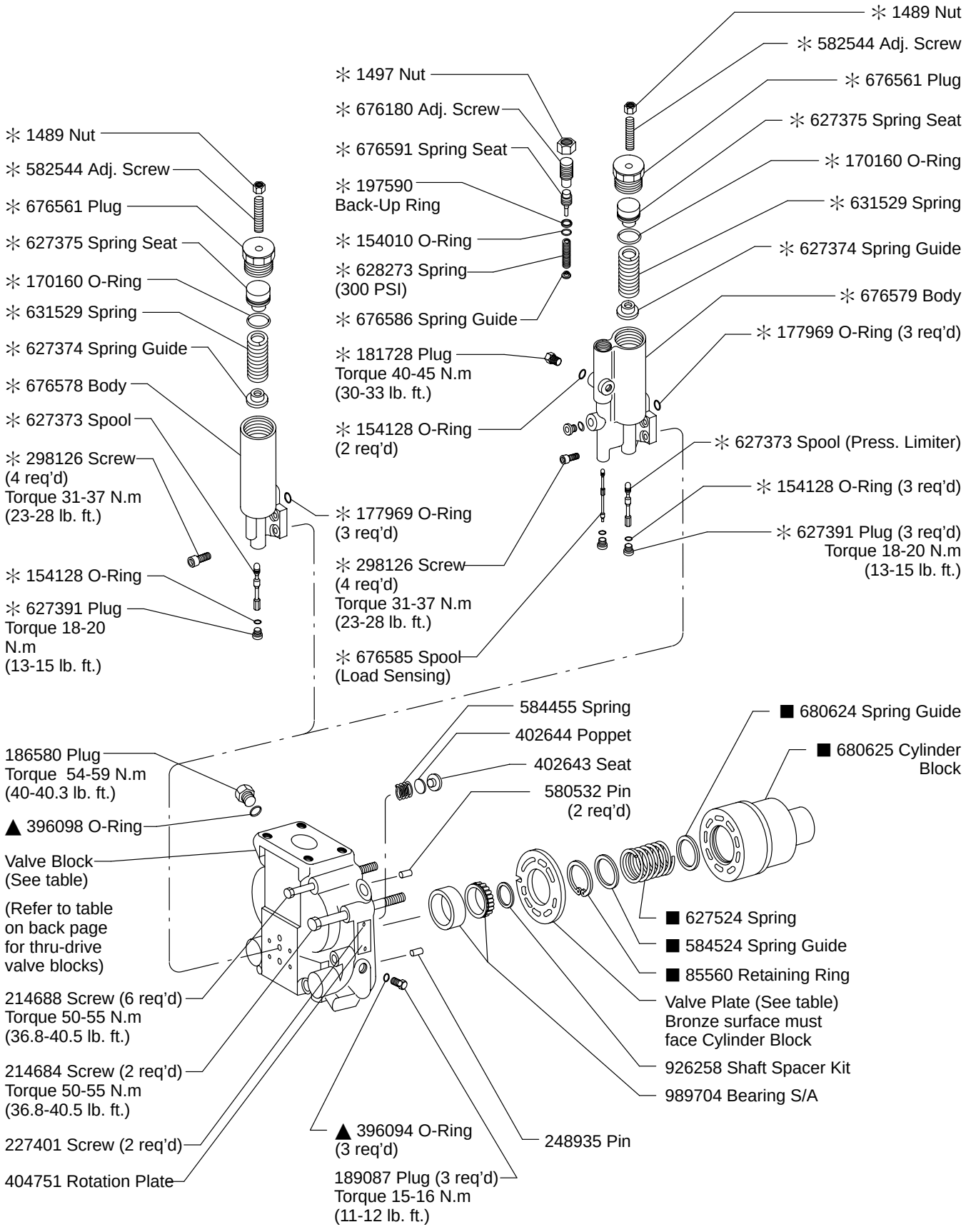

676580 'CVP' Load Sensing/ Pressure limiter compensator S/A. Shipped preset at approximately: Load sensing differential pressure 20 bar. Pressure limiter 250 bar.

PVE27*-E2-21-C**-20

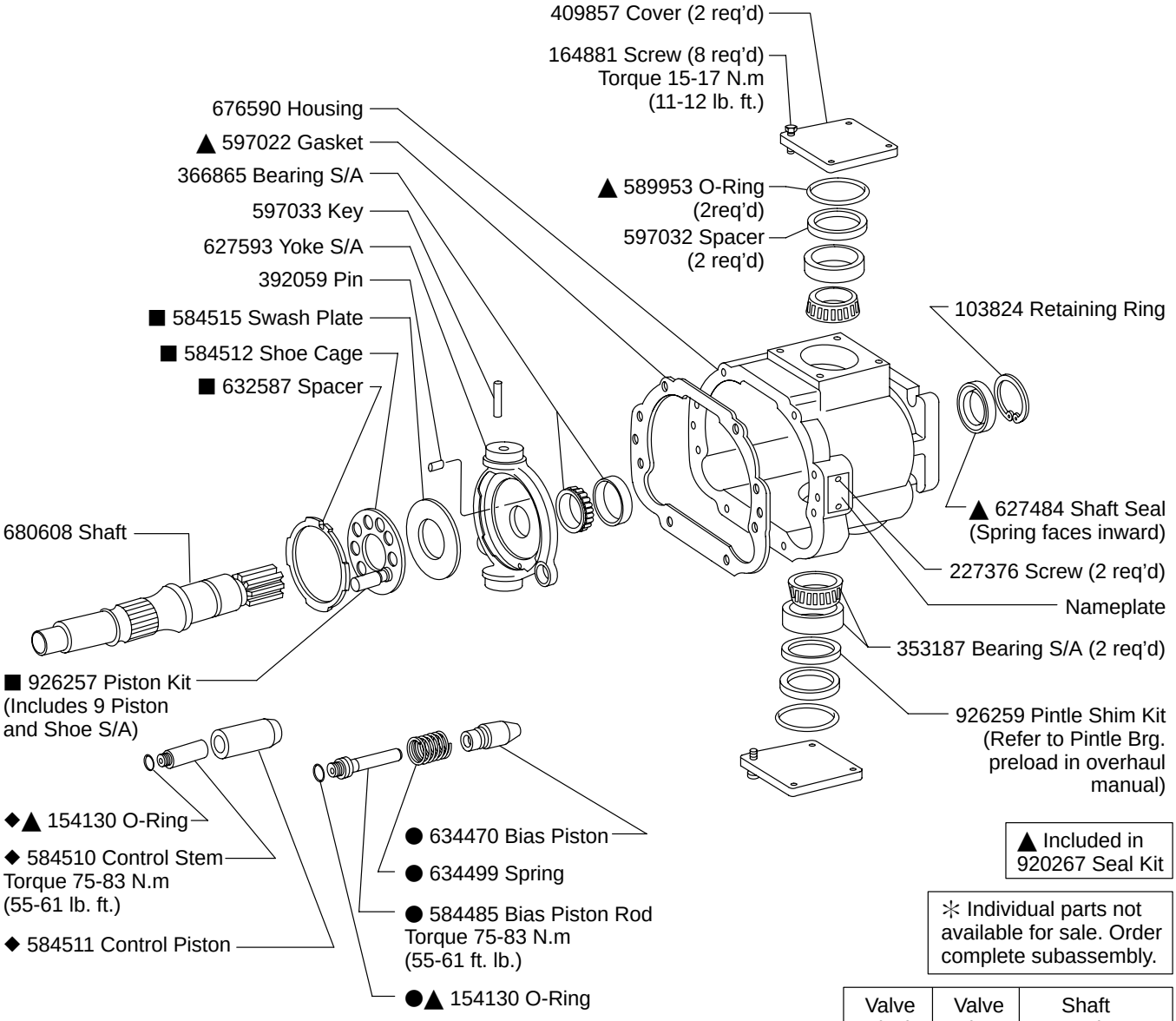

▲ Included in 920267 Seal Kit

⁜ Individual parts not available for sale. Order complete subassembly.

Valve Block	Valve Plate	Shaft Rotation
680786	680630	CCW Left
680785	680631	CW Right

● Included in 926450 Bias Piston Kit

■ Included in 938102 rotating group

◆ Included in 926449 Control Piston Kit

Note

Parts are shown for left hand shaft rotation. The position of control and bias pistons are reversed for right hand rotation. (Assemble using Loctite 270.

Model Code

PVE 27 * - E 2 - 21 - C - 20**

1 2 3 4 5 6 7 8

1 **Model Series**

PVE - Pump, variable, inline series E

2 **Flow Rating in USgpm (at 1800 RPM)**

27 - 27 USgpm

3 **Shaft Rotation (Viewed from Shaft End)**

R - Right hand (CW)
L - Left hand (CCW)

4 **Ports and Configuration**

E - Rear ports
Omitted - Side ports, flanged standard

5 **Input Shaft**

6 **Pump Design**

7 **Control Type**

C - Pressure compensator
CVP - Load sensing with pressure limiter

8 **Control Design**

For satisfactory service life of these components, use full flow filtration to provide fluid which meets ISO cleanliness code 20/18/15 or cleaner. Selections from Eaton OFP,OFR and OFRS filter series are recommended.

Printed in U.S.A.