EATON | Vickers

High Pressure, High Performance Vane Pumps

Parts Data

VMQ125T Series
– 32 Design

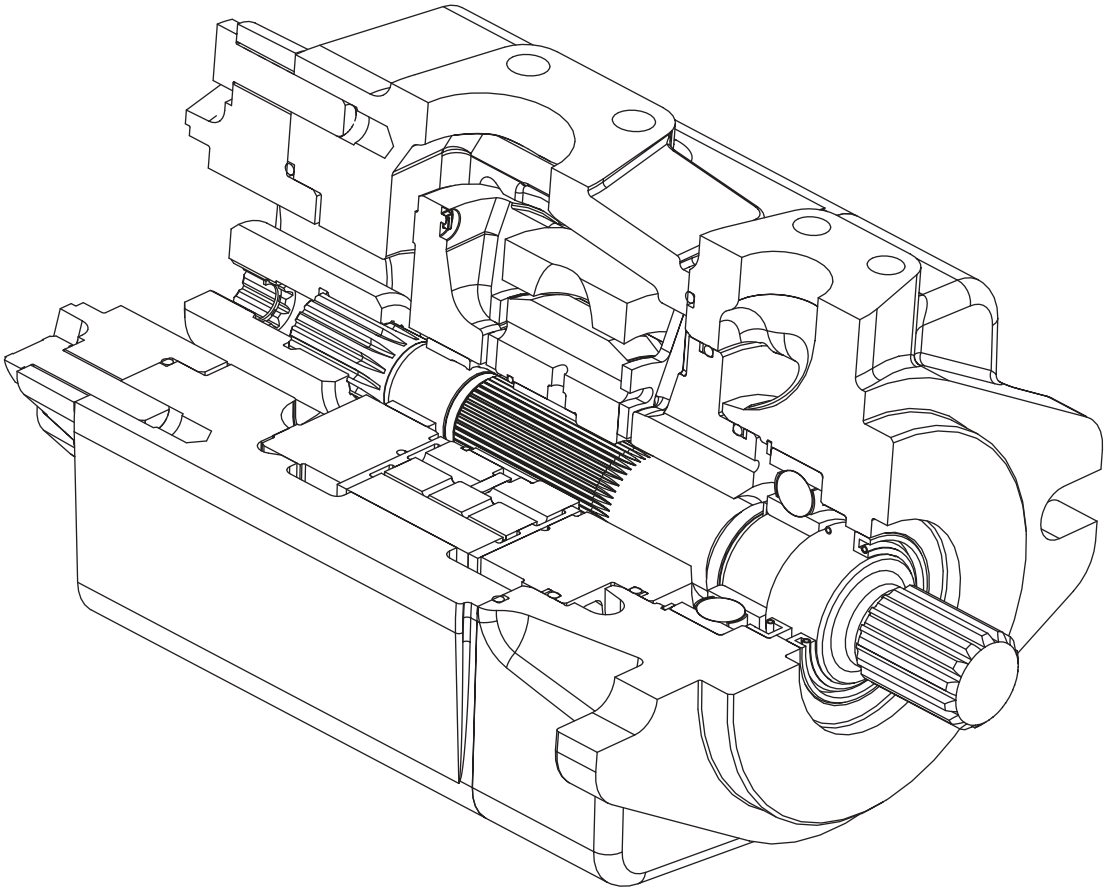

VICKERS®

Note: Lubricate all parts and seals with a thin coat of oil at assembly.

- ● Included in Cartridge Kit (see table 1)
- ▲ Included in single STD Seal Kit 02-334696 or Viton® Seal Kit 02-334697.
- △ Included in double STD Seal Kit 02-334698 or Viton® Seal Kit 02-334699.
- * See Table X1 and X2 for Kit Rotation Information

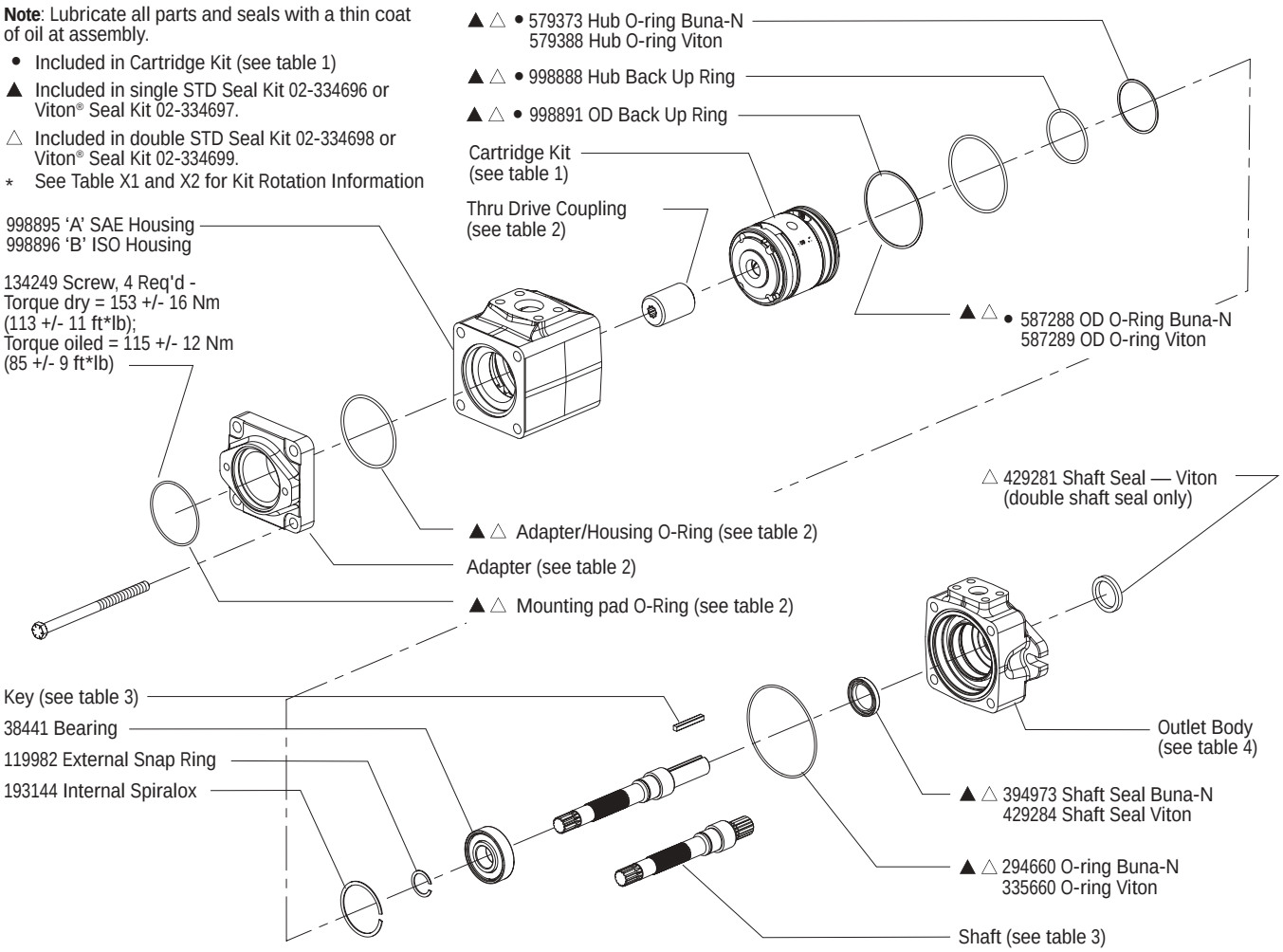

TABLE X1

Cartridge Kit Rotation for Right Hand Rotation Pump

R= Right Hand Rotation		L=Left Hand Rotation	
PUMP ROTATION	SHAFT END KIT ROTATION	CENTER KIT ROTATION	COVER END KIT ROTATION
Single & Thru (R)	(R)	-	-

*Notes: - A right hand rotation pump has the shaft turning clockwise when viewed from the input shaft end
- When ordering a right hand rotation kit, the part number will not have a suffix

TABLE X2

Cartridge Kit Rotation for Left Hand Rotation Pump

R= Right Hand Rotation		L=Left Hand Rotation	
PUMP ROTATION	SHAFT END KIT ROTATION	CENTER KIT ROTATION	COVER END KIT ROTATION
Single & Thru (L)	(L)	-	-

*Notes: - A left hand rotation pump has the shaft turning counterclockwise when viewed from the input shaft end
- When ordering a left hand rotation kit, the part number will have a suffix of '-L'

TABLE 1

MODEL CODE	*● CARTRIDGE KIT (BUNA-N)	*● CARTRIDGE KIT (VITON®)
VMQ125*010	02-347013	02-347014
VMQ125*016	02-347011	02-347012
VMQ125*020	02-347009	02-347010
VMQ125*025	02-347007	02-347008
VMQ125*032	02-347005	02-347006
VMQ125*040	02-347003	02-347004
VMQ125*045	02-347001	02-347002
VMQ125*050	02-346999	02-347000
VMQ125*063	02-346997	02-346998
VMQ125*071	02-346995	02-346996
VMQ125*080	02-346993	02-346994
VMQ125*090	02-347102	02-347103

Viton® is a registered trademark of E.I. Dupont Co.

TABLE 3

MODEL CODE	SHAFT	KEY
VMQ125T-*-***-*-*-01	937084	928540
VMQ125T-*-***-*-*-02	937085	—
VMQ125T-*-***-*-*-03	937086	928545
VMQ125T-*-***-*-*-04	937087	928563
VMQ125T-*-***-*-*-05	937088	928541
VMQ125T-*-***-*-*-06	937089	—
VMQ125T-*-***-*-*-07	937090	928546
VMQ125T-*-***-*-*-08	937091	928564

TABLE 4

OUTLET BODY				
Flange Mounting Style	**Single Shaft Seal Inch Port Threads**	**Single Shaft Seal Metric Port Threads**	**Double Shaft Seal Inch Port Threads**	**Double Shaft Seal Metric Port Threads**
SAE B	998600	998602	998601	998603
ISO 100	—	998604	—	998605

TABLE 2

MODEL CODE THRU DRIVE COMPONENTS	OUTLET SPLINE	MOUNTING PAD SIZE SIZE	ADAPTER	ADAPTER/HOUSING O-RING BUNA N	ADAPTER/HOUSING O-RING VITON	MOUNTING PAD O-RING BUNA N	MOUNTING PAD O-RING VITON	COUPLING ASSEMBLY
VMQ125T-*-***-*-*-**-16	SAE A	SAE A	937081	200159	262418	353409	576601	02-315064
VMQ125T-*-***-*-*-**-22	SAE B	SAE B	998588	200159	262418	375422	401525	02-315063
VMQ125T-*-***-*-*-**-25	SAE B-B	SAE B	998588	200159	262418	375422	401525	02-315061

Model Code

VMQ1 ** * *** * * ** ** * * * * * * 00 * 0 32

1 2 3 4 | 5 6 | 7 | 8 9 10 | 11 | 12 | 13 14 | 15 16 | 17 | 18 | 19 | 20 | 21 | 22 | 23 24 | 25 | 26 | 27 28

1 2 3 4 Series designation

VMQ1 – Vane pump single series

5 6 Frame size

25 – 10-90 cm^3/r (0.62-5.49 in^3/r)

7 Pump type

T – Thru-drive
(Options at model codes 12 and 15 16 must be specified for thru-drive units)

8 9 10 Displacement

Frame size 25

010 – 10 cm $^3/r$ (0.62 in $^3/r$)
016 – 16 cm $^3/r$ (0.98 in $^3/r$)
020 – 20 cm $^3/r$ (1.23 in $^3/r$
025 – 25 cm $^3/r$ (1.58 in $^3/r$)
032 – 32 cm $^3/r$ (1.96 in $^3/r$)
040 – 40 cm $^3/r$ (2.44 in $^3/r$)
045 – 45 cm $^3/r$ (2.75 in $^3/r$)
050 – 50 cm $^3/r$ (3.05 in $^3/r$)
063 – 63 cm $^3/r$ (3.84 in $^3/r$)
071 – 71 cm $^3/r$ (4.33 in $^3/r$)
080 – 80 cm $^3/r$ (4.88 in $^3/r$)
090 – 90 cm $^3/r$ (5.49 in $^3/r$)

11 Front flange mounting style

A – SAE B 2-bolt
101,60 (4.000) x 9,4 (0.37) pilot
14,4 (0.57) slots on 146,0 (5.75) bolt circle

C – ISO 3019/2 100A2HW 2-bolt
100,00 (3.937) x 9,2 (0.36) pilot
14,1 (0.56) slots on
140,0 (5.51) bolt circle

12 Rear mounting flange and orientation

Viewed from adapter end of pump

SAE A
A – In-line with mounting flange
B – 90° to mounting flange

SAE B
E – In-line with mounting flange
F – 90° to mounting flange

13 14 Input shaft type*

01 – SAE J744 keyed
Frame size 25:
25,40 (1.000)

02 – SAE J744 splined
Frame size 25: B-B

03 – ISO 3019/2 keyed
Frame size 25:
25,00 (0.984)

05 – SAE J744 keyed
Frame size 25:
31,75 (1.250)

06 – SAE J744 splined
Frame size 25: C

07 – ISO 3019/2 keyed
Frame size 25: 32,00 (1.260)

09 – SAE J744 splined
Frame size 25: B

15 16 Output shaft coupling

Thru-drive units, model code 7 = T

16 – SAE J744 16-4 A-spline shaft
22 – SAE J744 22-4 B-spline shaft
25 – SAE J744 25-4 B-B-spline shaft

17 Inlet port type

A – SAE J518 4-bolt split flange
B – ISO 6162 4-bolt split flange

18 Outlet port type

A – SAE J518 4-bolt flange
B – ISO 6162 4-bolt flange

19 Outlet port position

Viewed from adapter end of pump

A – Opposite inlet port
B – 90° CCW to inlet port
C – In-line with inlet port
D – 90° CW to inlet port

20 Shaft seal

A – Single, primary
B – Double, secondary (spring side out) Recommended for wet mount applications

21 Seal type

N – Buna N
V – Viton
W – Buna N with Viton shaft seal(s)

22 Shaft rotation

Viewed from shaft end of pump

L – Left hand (CCW)
R – Right hand (CW)

23 24 Special features

00 – None

25 Paint

0 – None
A – Blue

26 Customer identification

0 – None

27 28 Design code

32 – 32 design
Installation dimensions remain unchanged for design numbers 30 to 39 inclusive.

* Verify shaft torque ratings meet or exceed input torque requirements

Eaton
14615 Lone Oak Road
Eden Prairie, MN 55344
USA
Tel: 952 937-9800
Fax: 952 974-7722
www.hydraulics.eaton.com

Eaton
20 Rosamond Road
Footscray
Victoria 3011
Australia
Tel: (61) 3 9319 8222
Fax: (61) 3 9318 5714

Eaton
Dr.-Reckeweg-Str. 1
D-76532 Baden-Baden
Germany
Tel: (49) 7221 682-0
Fax: (49) 7221 682-788

© 2003 Eaton Corporation
All rights reserved
Printed in USA
Document No. V-PUVN-TP005-E
June 2003 1M