EATON | Vickers

High Pressure, High Performance Vane Pumps

Parts Data

VMQ145T Series
– 32 Design

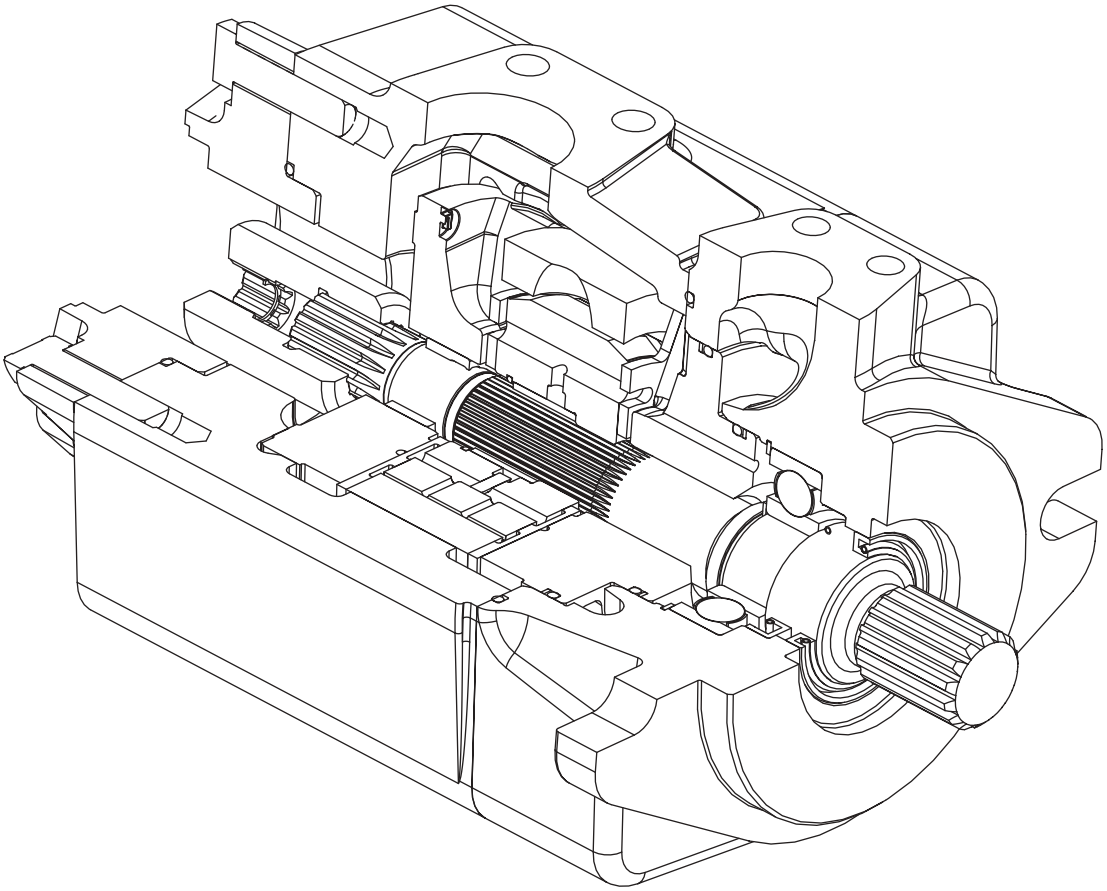

VICKERS®

Note: Lubricate all parts and seals with a thin coat of oil at assembly.

- ● Included in Cartridge Kit (see table 4)
- ▲ Included in 02-334700 Buna-N Seal Kit, Single Shaft Seal or 02-334701 Viton® Seal Kit, Single Shaft Seal.
- △ Included in 02-334702 Buna-N Seal Kit, Double Shaft Seal or 02-334703 Viton® Seal Kit, Double Shaft Seal.
- * See Table X1 and X2 for Kit Rotation Information

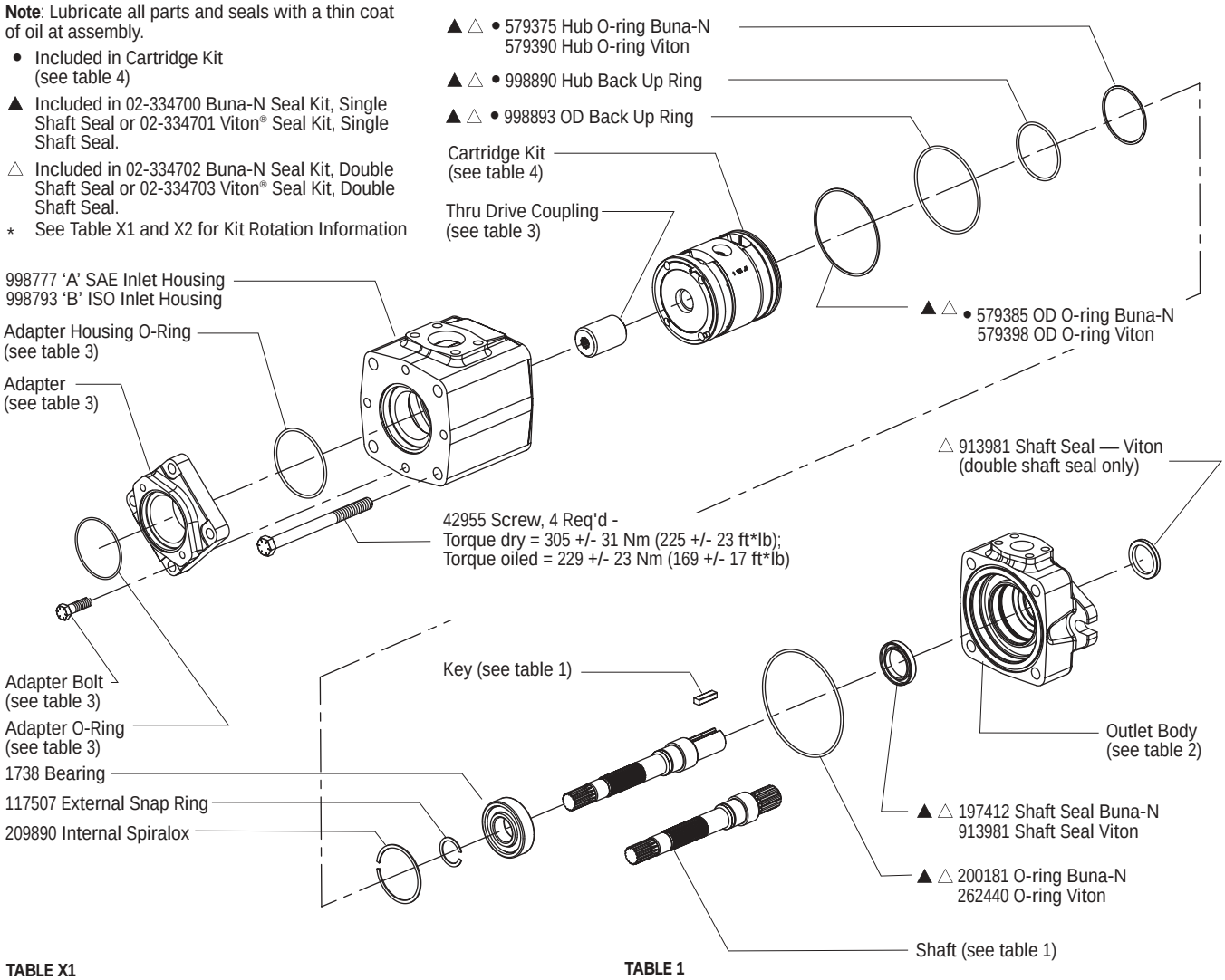

TABLE X1

Cartridge Kit Rotation for Right Hand Rotation Pump

R= Right Hand Rotation		L=Left Hand Rotation	
PUMP ROTATION	SHAFT END KIT ROTATION	CENTER KIT ROTATION	COVER END KIT ROTATION
Single & Thru (R)	(R)	-	-

*Notes:
- A right hand rotation pump has the shaft turning clockwise when viewed from the input shaft end
- When ordering a right hand rotation kit, the part number will not have a suffix

TABLE X2

Cartridge Kit Rotation for Left Hand Rotation Pump

R= Right Hand Rotation		L=Left Hand Rotation	
PUMP ROTATION	SHAFT END KIT ROTATION	CENTER KIT ROTATION	COVER END KIT ROTATION
Single & Thru (L)	(L)	-	-

*Notes:
- A left hand rotation pump has the shaft turning counterclockwise when viewed from the input shaft end
- When ordering a left hand rotation kit, the part number will have a suffix of '-L'

TABLE 1

MODEL CODE	30TH DESIGN SHAFT	31ST & 32ND DESIGN SHAFT	KEY
VMQ145T-*-***-*-*-01	937122	4993368-001	928542
VMQ145T-*-***-*-*-02	937123	4993369-001	—
VMQ145T-*-***-*-*-03	937124	4993370-001	928547
VMQ145T-*-***-*-*-04	—	—	928565
VMQ145T-*-***-*-*-05	937125	4993371-001	928543
VMQ145T-*-***-*-*-06	937126	4993372-001	—

TABLE 2

OUTLET BODY	SINGLE SHAFT SEAL		DOUBLE SHAFT SEAL	
Flange Mounting Style	**Inch Port Threads**	**Metric Port Threads**	**Inch Port Threads**	**Metric Port Threads**
SAE C	4993341-001	4993342-001	4993343-001	4993344-001
ISO 125	—	4993346-001	—	4993345-001

TABLE 4

MODEL CODE	* ● CARTRIDGE KIT (BUNA-N)	* ● CARTRIDGE KIT (VITON®)
VMQ145*140	02-346970	02-346971
VMQ145*160	02-346968	02-346969
VMQ145*180	02-346966	02-346967
VMQ145*195	02-346964	02-346965
VMQ145*215	02-346962	02-346963

Viton® is a registered trademark of E.I. Dupont Co.

TABLE 3

MODEL CODE THRU DRIVE COMPONENTS	OUTLET SPLINE SIZE	ADAPTER MOUNTING PAD SIZE	ADAPTER	ADAPTER/ HOUSING O-RING BUNA N	VITON	MOUNTING PAD O-RING BUNA N	VITON	COUPLING ASSEMBLY	ADAPTER BOLT	ADAPTER BOLT TORQUE NM (FT•LB) DRY	OILED
VMQ145T-*-***-*-*-**-16	SAE A	SAE A	937081	200159	262418	353409	576601	02-315059	1315	153±16 (113±11)	115±12 (85±9)
VMQ145T-*-***-*-*-**-22	SAE B	SAE B	998588	200159	262418	375422	401525	02-315058	1315	153±16 (113±11)	115±12 (85±9)
VMQ145T-*-***-*-*-**-25	SAE B-B	SAE B	998588	200159	262418	375422	401525	02-315057	1315	153±16 (113±11)	115±12 (85±9)
VMQ145T-*-***-*-*-**-32	SAE C	SAE C	998589	200159	262418	312092	353264	02-315056	298168	305±31(225±23)	229±23 (169±1

Model Code

VMQ1	**	*	***	*	*	**	**	*	*	*	*	*	*	00	*	0	32
1 2 3 4	5 6	7	8 9 10	11	12	13 14	15 16	17	18	19	20	21	22	23 24	25	26	27 28

1 2 3 4 Series designation

VMQ1 – Vane pump single series

5 6 Frame size

45 – 140-215 cm^3/r (8.54-13.12 in^3/r)

7 Pump type

T – Thru-drive (Options at model codes 12 and 15 16 must be specified for thru-drive units)

8 9 10 Displacement

Frame size 45

140 – 140 cm $^3/r$ (8.54 in $^3/r$)
160 – 160 cm $^3/r$ (9.76 in $^3/r$)
180 – 180 cm $^3/r$ (10.98 in $^3/r$)
195 – 195 cm $^3/r$ (11.89 in $^3/r$)
215 – 215 cm $^3/r$ (13.12 in $^3/r$)

11 Front flange mounting style

B – SAE C 2-bolt
127,00 (5.000) x 12,4 (0.49) pilot
17,6 (0.69) slots on
181,0 (7.13) bolt circle

D – ISO 3019/2 125A2HW 2-bolt
125,00 (4.921) x 9,2 (0.36) pilot
18,1 (0.71) slots on
180,0 (7.09) bolt circle

12 Rear mounting flange and orientation

Viewed from adapter end of pump

SAE A
A – In-line with mounting flange
B – 90° to mounting flange

SAE B
E – In-line with mounting flange
F – 90° to mounting flange

SAE C
L – 45° CCW to mounting flange
M – 45° CW to mounting flange

13 14 Input shaft type*

01 – SAE J744 keyed
Frame size 45: 38,10 (1.500)

02 – SAE J744 splined
Frame size 45: C-C

03 – ISO 3019/2 keyed
Frame size 45: 40,00 (1.575)

05 – SAE J744 keyed
Frame size 45: 44,45 (1.750)

06 – SAE J744 splined
Frame size 45: D

09 – SAE J744 splined
Frame size 45: C (Not available on thru-drive units)

15 16 Output shaft coupling

Thru-drive units, model code 7 = T

16 – SAE J744 16-4 A-spline shaft
22 – SAE J744 22-4 B-spline shaft
25 – SAE J744 25-4 B-B-spline shaft
32 – SAE J744 32-4 C-spline shaft (frame sizes 35 & 45 only)

17 Inlet port type

A – SAE J518 4-bolt split flange
B – ISO 6162 4-bolt split flange

18 Outlet port type

A – SAE J518 4-bolt flange
B – ISO 6162 4-bolt flange

19 Outlet port position

Viewed from adapter end of pump

A – Opposite inlet port
B – 90° CCW to inlet port
C – In-line with inlet port
D – 90° CW to inlet port

20 Shaft seal

A – Single, primary
B – Double, secondary (spring side out) Recommended for wet mount applications

21 Seal type

N – Buna N
V – Viton
W – Buna N with Viton shaft seal(s)

22 Shaft rotation

Viewed from shaft end of pump

L – Left hand (CCW)
R – Right hand (CW)

23 24 Special features

00 – None

25 Paint

0 – None
A – Blue

26 Customer identification

0 – None

27 28 Design code

32 – 32 design
Installation dimensions remain unchanged for design numbers 30 to 39 inclusive.

* Verify shaft torque ratings meet or exceed input torque requirements

Eaton
14615 Lone Oak Road
Eden Prairie, MN 55344
USA
Tel: 952 937-9800
Fax: 952 974-7722
www.hydraulics.eaton.com

Eaton
20 Rosamond Road
Footscray
Victoria 3011
Australia
Tel: (61) 3 9319 8222
Fax: (61) 3 9318 5714

Eaton
Dr.-Reckeweg-Str. 1
D-76532 Baden-Baden
Germany
Tel: (49) 7221 682-0
Fax: (49) 7221 682-788

© 2003 Eaton Corporation
All rights reserved
Printed in USA
Document No. V-PUVN-TP007-E
June 2003 1M