EATON | Vickers

High Pressure, High Performance Double Vane Pumps

Parts Data

VMQ23525S Series
– 32 Design

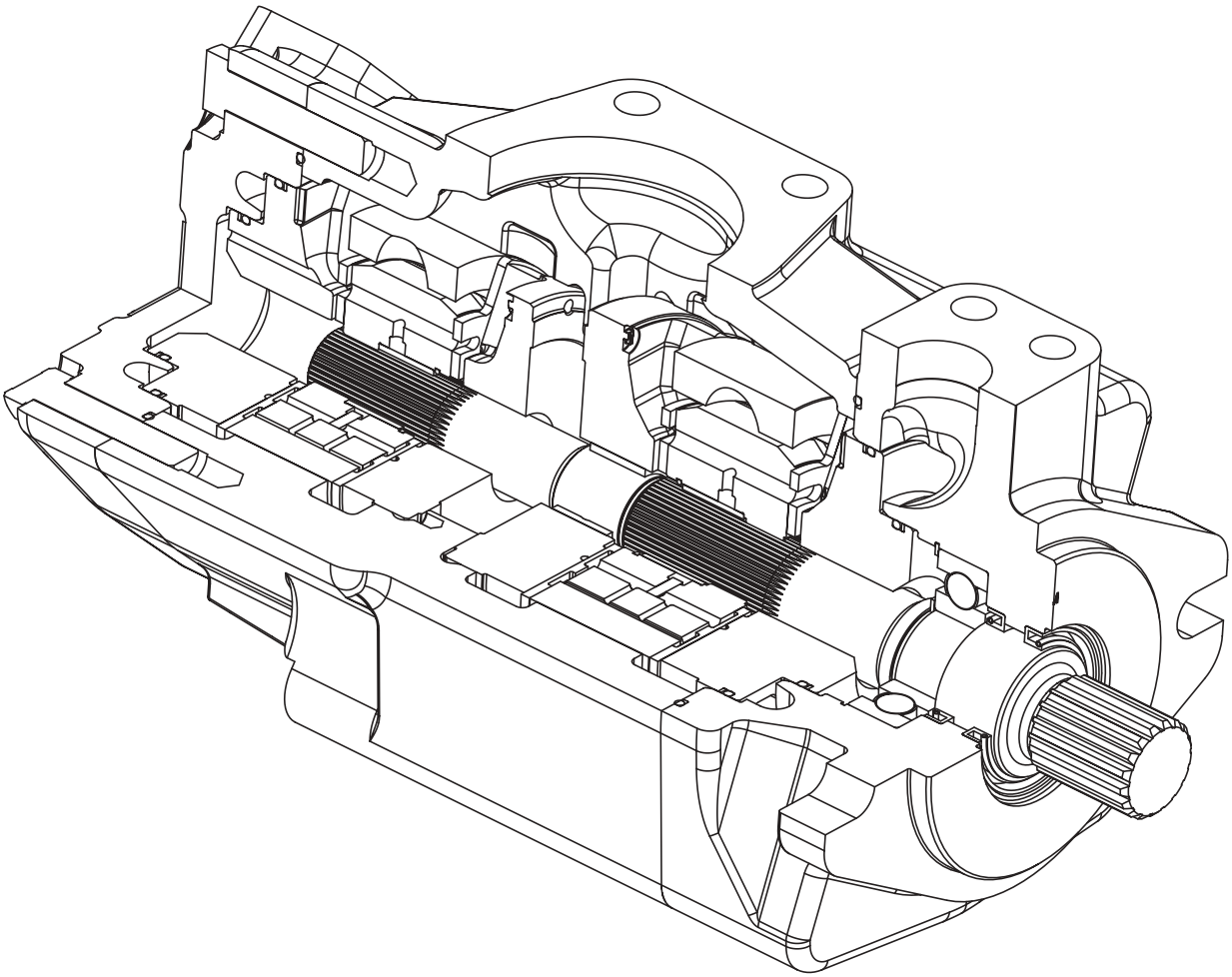

VICKERS®

High Pressure, High Performance Double Vane Pump VMQ23525S Series — 32 Design

Note: Lubricate all parts and seals with a thin coat of oil at assembly.

- • Included in Cartridge Kit (see table)
- ▲ Included in 02-334556 STD Seal Kit, Single Shaft Seal or 02-334557 Viton® Seal Kit, Single Shaft Seal.
- △ Included in 02-334639 STD Seal Kit, Double Shaft Seal or 02-334640 Viton® Seal Kit, Double Shaft Seal.
- * With double and triple pumps, the orientation of the kits is such that the kit rotation is a reverse of the pump rotation. See tables X1 and X2 for the correct kit rotation relative to the pump rotation.

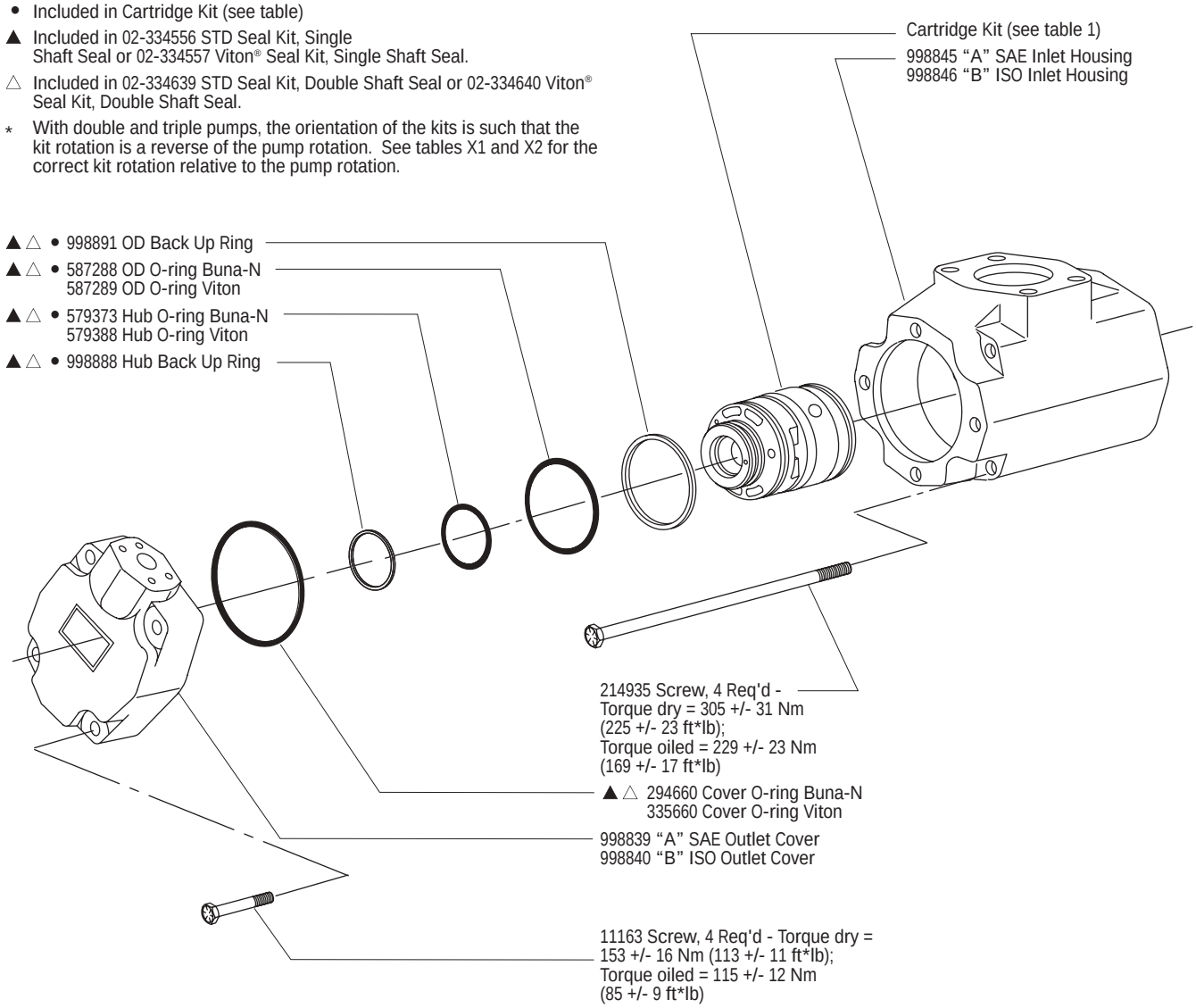

TABLE X1

Cartridge Kit Rotation for Right Hand Rotation Pump

R= Right Hand Rotation L=Left Hand Rotation

PUMP ROTATION	SHAFT END KIT ROTATION	CENTER KIT ROTATION	COVER END KIT ROTATION
Double (R)	(R)	-	(L)

*Notes:
- A right hand rotation pump has the shaft turning clockwise when viewed from the input shaft end
- When ordering a right hand rotation kit, the part number will not have a suffix.

TABLE X2

Cartridge Kit Rotation for Left Hand Rotation Pump

R= Right Hand Rotation L=Left Hand Rotation

PUMP ROTATION	SHAFT END KIT ROTATION	CENTER KIT ROTATION	COVER END KIT ROTATION
Double (L)	(L)	-	(R)

*Notes:
- A left hand rotation pump has the shaft turning counterclockwise when viewed from the input shaft end
- When ordering a left hand rotation kit, the part number will have a suffix of ‘-L’

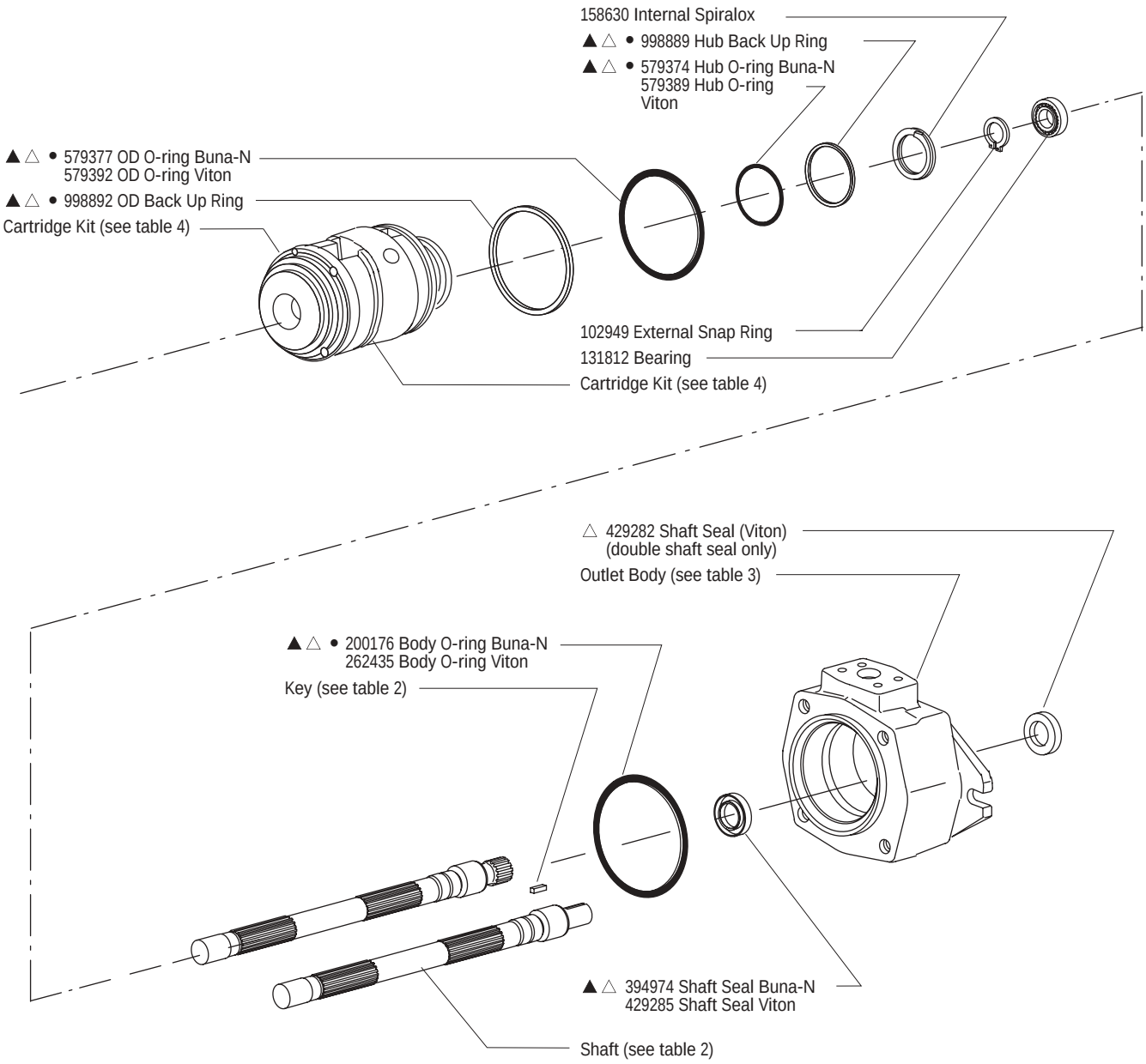
158630 Internal Spiralox
▲△ • 998889 Hub Back Up Ring
▲△ • 579374 Hub O-ring Buna-N
579389 Hub O-ring
Viton
▲△ • 579377 OD O-ring Buna-N
579392 OD O-ring Viton
▲△ • 998892 OD Back Up Ring
Cartridge Kit (see table 4)
102949 External Snap Ring
131812 Bearing
Cartridge Kit (see table 4)
△ 429282 Shaft Seal (Viton)
(double shaft seal only)
Outlet Body (see table 3)
▲△ • 200176 Body O-ring Buna-N
262435 Body O-ring Viton
Key (see table 2)
▲△ 394974 Shaft Seal Buna-N
429285 Shaft Seal Viton
Shaft (see table 2)

TABLE 1

MODEL CODE COVER END	∗● CARTRIDGE KIT (BUNA-N)	∗● CARTRIDGE KIT (VITON®)
VMQ23525S***010	02-465574	02-465569
VMQ23525S***016	02-465575	02-465570
VMQ23525S***020	02-465576	02-465571
VMQ23525S***025	02-465578	02-465572
VMQ23525S***032	02-465577	02-465573
VMQ23525S***040	02-348974	02-348981
VMQ23525S***045	02-348975	02-348982
VMQ23525S***050	02-348976	02-348983
VMQ23525S***063	02-348977	02-348984
VMQ23525S***071	02-348978	02-348985
VMQ23525S***080	02-348979	02-348986
VMQ23525S***090	02-348980	02-348987

Viton® is a registered trademark of E.I. Dupont Co.

TABLE 2

MODEL CODE	SHAFT	KEY
VMQ23525S-***-***-*-*-01	934075	928541
VMQ23525S-***-***-*-*-02	934076	—
VMQ23525S-***-***-*-*-03	934077	928546
VMQ23525S-***-***-*-*-04	934078	928564
VMQ23525S-***-***-*-*-05	934079	928542
VMQ23525S-***-***-*-*-06	934080	—
VMQ23525S-***-***-*-*-07	934081	928547
VMQ23525S-***-***-*-*-08	934082	928565

TABLE 3

OUTLET BODY				
Flange Mounting Style	**Single Shaft Seal**		**Double Shaft Seal**	
	Inch Port Threads	**Metric Port Threads**	**Inch Port Threads**	**Metric Port Threads**
SAE B	998732	998734	998733	998735
ISO 100	—	998736	—	998737

TABLE 4

MODEL CODE SHAFT END	∗● CARTRIDGE KIT (BUNA-N)	∗● CARTRIDGE KIT (VITON®)
VMQ23525S090***	02-346986	02-346987
VMQ23525S100***	02-346984	02-346985
VMQ23525S112***	02-346982	02-346983
VMQ23525S125***	02-346980	02-346981
VMQ23525S135***	02-346978	02-346979
VMQ23525S140***	02-348374	02-348376
VMQ23525S158***	02-348181	02-348180

Viton® is a registered trademark of E.I. Dupont Co.

Model Code

VMQ2	**	**	S	***	***	*	0	**	00	*	*	*	*	*	*	*	*	00	*	0	32
1 2 3 4	5 6	7 8	9	10 11 12	13 14 15	16	17	18 19	20 21	22	23	24	25	26	27	28	29	30 31	32	33	34 35

1 2 3 4 — Series designation

VMQ2 – Vane pump double series

5 6 — Frame size (front section)

35 – 90-158 cm^3/r (5.49-9.64 in^3/r)

7 8 — Frame size (rear section)

25 – 10-90 cm^3/r (0.62-5.49 in^3/r)

9 — Pump type

S – Standard

10 11 12 — Displacement (front section)

Frame size 35

090 – 90 cm^3/r (5.49 in^3/r)
100 – 100 cm^3/r (6.10 in^3/r)
112 – 112 cm^3/r (6.83 in^3/r)
125 – 125 cm^3/r (7.63 in^3/r)
135 – 135 cm^3/r (8.24 in^3/r)
140 – 140 cm^3/r (8.54 in^3/r)
158 – 158 cm^3/r (9.64 in^3/r)

13 14 15 — Displacement (rear section)

Frame size 25

010 – 10 cm^3/r (0.62 in^3/r)
016 – 16 cm^3/r (0.98 in^3/r)
020 – 20 cm^3/r (1.23 in^3/r)
025 – 25 cm^3/r (1.58 in^3/r)
032 – 32 cm^3/r (1.96 in^3/r)
040 – 40 cm^3/r (2.44 in^3/r)
045 – 45 cm^3/r (2.75 in^3/r)
050 – 50 cm^3/r (3.05 in^3/r)
063 – 63 cm^3/r (3.84 in^3/r)
071 – 71 cm^3/r (4.33 in^3/r)
080 – 80 cm^3/r (4.88 in^3/r)
090 – 90 cm^3/r (5.49 in^3/r)

16 — Front flange mounting style

B – SAE C 2-bolt
127,00 (5.000) x 12,4 (0.49) pilot
17,6 (0.69) slots on
181,0 (7.13) bolt circle

D – ISO 3019/2 125A2HW 2-bolt
125,00 (4.921) x 9,2 (0.36) pilot
18,1 (0.71) slots on
180,0 (7.09) bolt circle

17 — Adapter flange

0 – None (standard double pump)

18 19 — Input shaft type*

01 – SAE J744 keyed
Frame size 35:
31,75 (1.250)

02 – SAE J744 splined
Frame size 35: C

03 – ISO 3019/2 keyed
Frame size 35:
32,00 (1.260)

05 – SAE J744 keyed
Frame size 35:
38,10 (1.500)

06 – SAE J744 splined
Frame size 35: C-C

07 – ISO 3019/2 keyed
Frame size 35:
40,00 (1.575)

20 21 — Output shaft coupling

00 – None (standard double pump)

22 — Inlet port type

A – SAE J518 4-split flange
B – ISO 6162 4-bolt flange

23 — Front outlet port type

A – SAE J518 4-bolt flange
B – ISO 6162 4-bolt flange

24 — Rear outlet port type

A – SAE J518 4-bolt flange
B – ISO 6162 4-bolt flange

25 — Front outlet port position

Viewed from cover end of pump

A – Opposite inlet port
B – 90° CCW to inlet port
C – In-Line with front inlet port
D – 90° CW to inlet port

26 — Rear outlet port position

Viewed from cover end of pump

A – 135° CCW to inlet port
B – 45° CCW to inlet port
C – 45° CW to inlet port
D – 135° CW to inlet port

27 — Shaft Seal

A – Single, primary
B – Double, secondary (spring side out) Recommended for wet mount applications

28 — Seal Type

N – Buna-N
V – Viton
W – Buna-N with Viton shaft seal(s)

29 — Shaft rotation

Viewed from shaft end of pump

L – Left Hand (CCW)
R – Right Hand (CW)

30 31 — Special features

00 – None

32 — Paint

O – None
A – Blue

33 — Customer identification

O – None

34 35 — Design code

32 – 32 design
Installation dimensions remain unchanged for design numbers 30 to 39 inclusive.

* Verify shaft torque ratings meet or exceed input torque requirements

Eaton
14615 Lone Oak Road
Eden Prairie, MN 55344
USA
Tel: 952 937-9800
Fax: 952 974-7722
www.hydraulics.eaton.com

Eaton
20 Rosamond Road
Footscray
Victoria 3011
Australia
Tel: (61) 3 9319 8222
Fax: (61) 3 9318 5714

Eaton
Dr.-Reckeweg-Str. 1
D-76532 Baden-Baden
Germany
Tel: (49) 7221 682-0
Fax: (49) 7221 682-788

© 2003 Eaton Corporation
All rights reserved
Printed in USA
Document No. V-PUVN-TP009-E
June 2003 1M