EATON | Vickers

High Pressure, High Performance Double Vane Pumps

Parts Data

VMQ24525S Series
– 32 Design

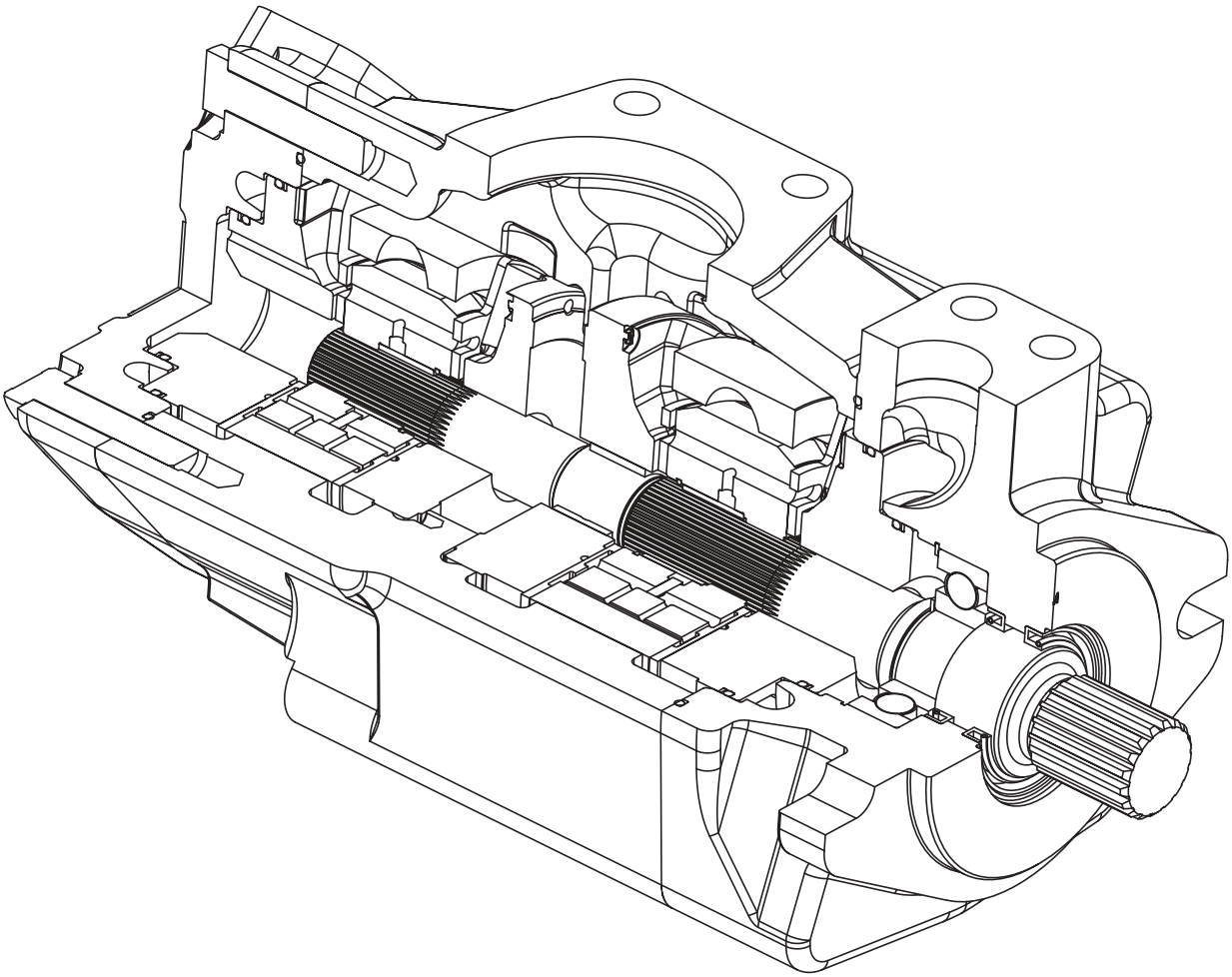

VICKERS®

High Pressure, High Performance Double Vane Pump VMQ24525S Series — 32 Design

Note: Lubricate all parts and seals with a thin coat of oil at assembly.

- • Included in Cartridge Kit (see table)
- ▲ 02-334560 Buna-N Seal Kit, Single Shaft Seal or 02-334561 Viton® Seal Kit, Single Shaft Seal.
- △ 02-334643 Buna-N Seal Kit, Double Shaft Seal or 02-334644 Viton® Seal Kit, Double Shaft Seal.
- * With double and triple pumps, the orientation of the kits is such that the kit rotation is a reverse of the pump rotation. See tables X1 and X2 for the correct kit rotation relative to the pump rotation.

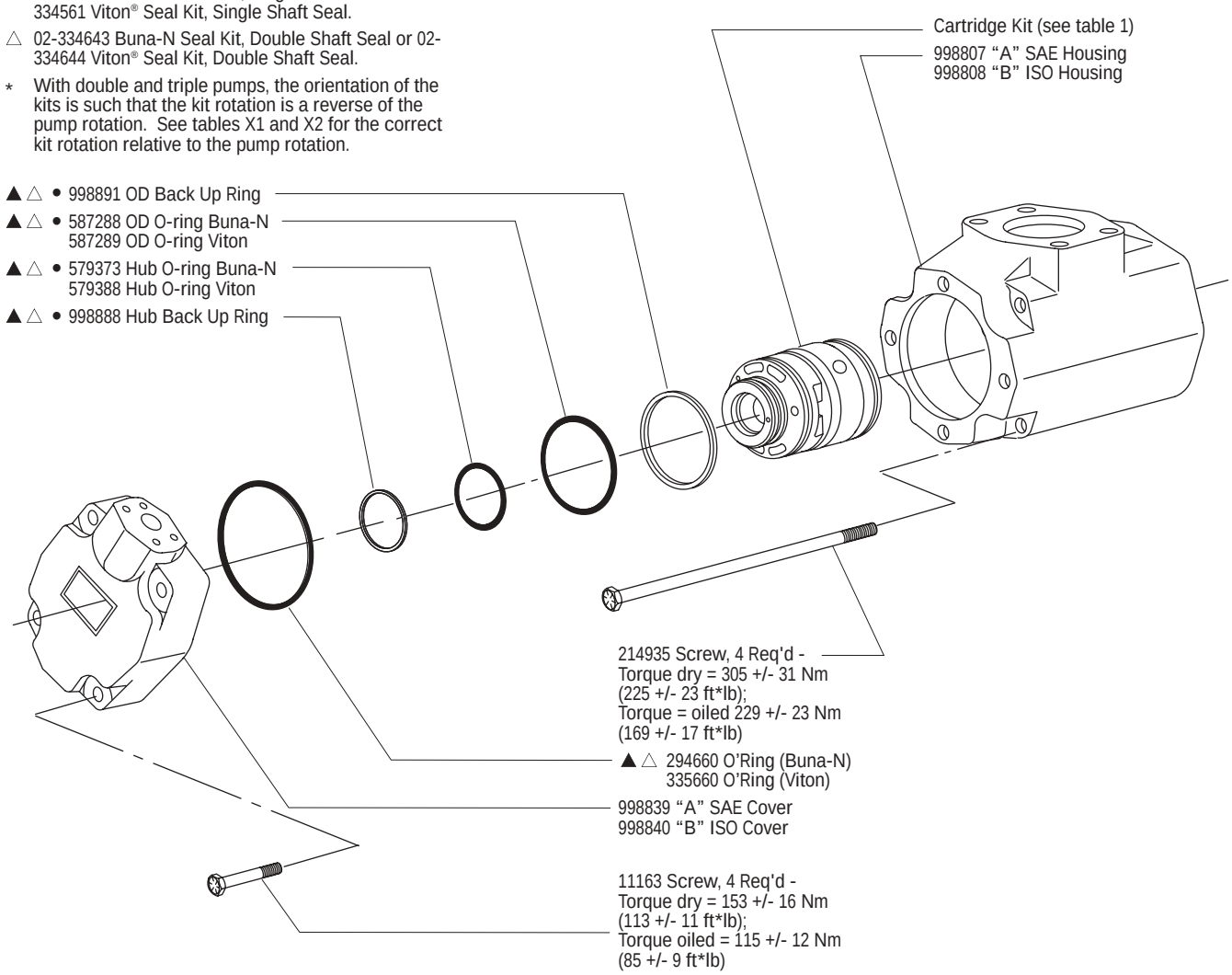

TABLE X1

Cartridge Kit Rotation for Right Hand Rotation Pump

R= Right Hand Rotation L=Left Hand Rotation

PUMP ROTATION	SHAFT END KIT ROTATION	CENTER KIT ROTATION	COVER END KIT ROTATION
Double (R)	(R)	-	(L)

*Notes: - A right hand rotation pump has the shaft turning clockwise when viewed from the input shaft end

- When ordering a right hand rotation kit, the part number will not have a suffix.

TABLE X2

Cartridge Kit Rotation for Left Hand Rotation Pump

R= Right Hand Rotation L=Left Hand Rotation

PUMP ROTATION	SHAFT END KIT ROTATION	CENTER KIT ROTATION	COVER END KIT ROTATION
Double (L)	(L)	-	(R)

*Notes: - A left hand rotation pump has the shaft turning counterclockwise when viewed from the input shaft end

- When ordering a left hand rotation kit, the part number will have a suffix of '-L'

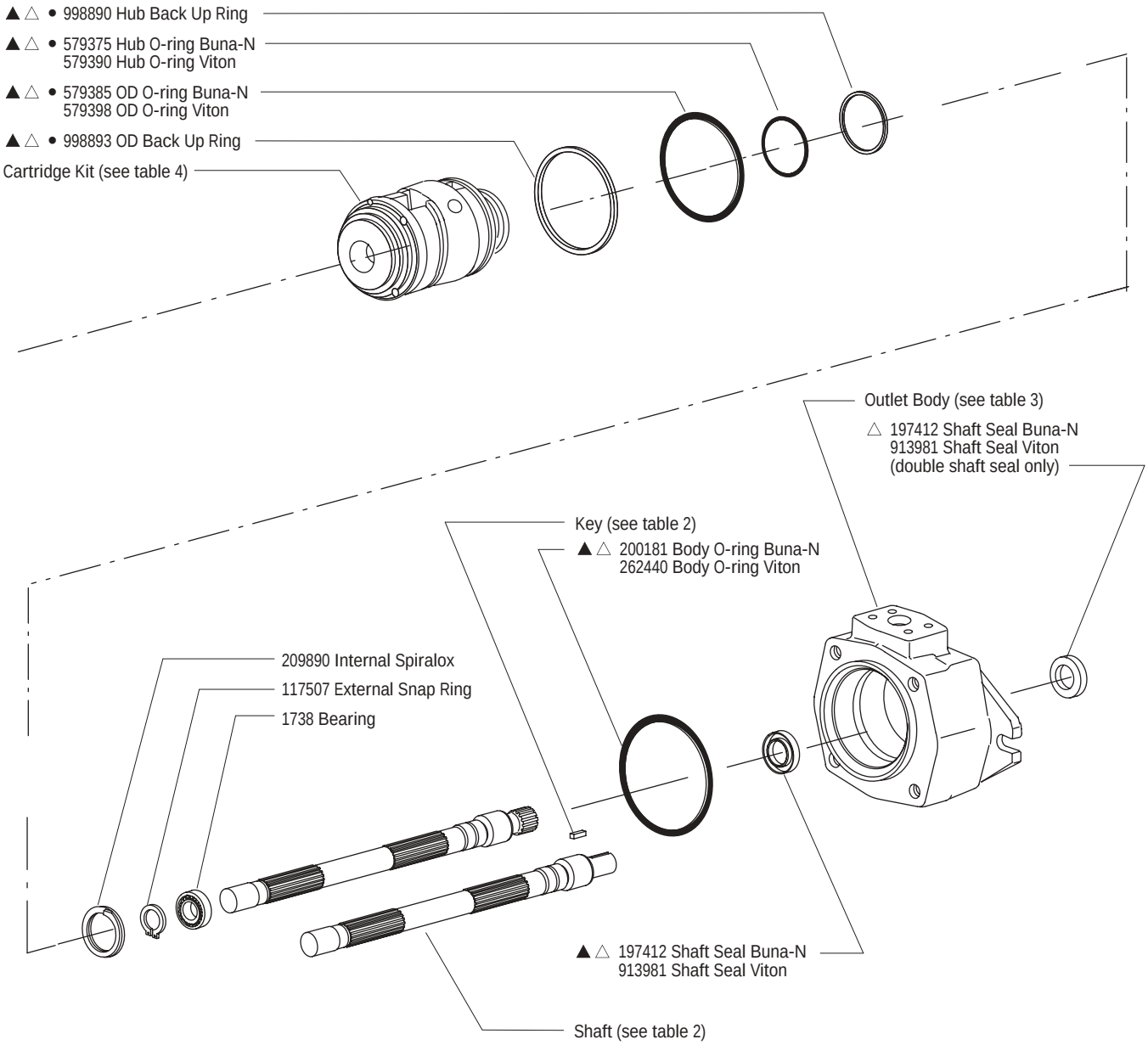
▲△ • 998890 Hub Back Up Ring
▲△ • 579375 Hub O-ring Buna-N
579390 Hub O-ring Viton
▲△ • 579385 OD O-ring Buna-N
579398 OD O-ring Viton
▲△ • 998893 OD Back Up Ring
Cartridge Kit (see table 4)
Outlet Body (see table 3)
△ 197412 Shaft Seal Buna-N
913981 Shaft Seal Viton
(double shaft seal only)
Key (see table 2)
▲△ 200181 Body O-ring Buna-N
262440 Body O-ring Viton
209890 Internal Spiralox
117507 External Snap Ring
1738 Bearing
▲△ 197412 Shaft Seal Buna-N
913981 Shaft Seal Viton
Shaft (see table 2)

TABLE 1

MODEL CODE COVER END	*● CARTRIDGE KIT (BUNA-N)	*● CARTRIDGE KIT (VITON®)
VMQ24525S***010	02-465574	02-465569
VMQ24525S***016	02-465575	02-465570
VMQ24525S***020	02-465576	02-465571
VMQ24525S***025	02-465578	02-465572
VMQ24525S***032	02-465577	02-465573
VMQ24525S***040	02-348974	02-348981
VMQ24525S***045	02-348975	02-348982
VMQ24525S***050	02-348976	02-348983
VMQ24525S***063	02-348977	02-348984
VMQ24525S***071	02-348978	02-348985
VMQ24525S***080	02-348979	02-348986
VMQ24525S***090	02-348980	02-348987

Viton® is a registered trademark of E.I. Dupont Co.

TABLE 2

MODEL CODE	30TH DESIGN SHAFT	31ST & 32ND DESIGN SHAFT	KEY
VMQ24525S-***-***-*-*-01	934229	4993363-001	928542
VMQ24525S-***-***-*-*-02	934230	4993364-001	—
VMQ24525S-***-***-*-*-03	934231	4993365-001	928547
VMQ24525S-***-***-*-*-04	—	—	—
VMQ24525S-***-***-*-*-05	934232	4993366-001	928543
VMQ24525S-***-***-*-*-06	934233	4993367-001	—
VMQ24525S-***-***-*-*-09	937226	4993375-001	—

TABLE 3

OUTLET BODY

Flange Mounting Style	**Single Shaft Seal**		**Double Shaft Seal**	
	Inch Port Threads	**Metric Port Threads**	**Inch Port Threads**	**Metric Port Threads**
SAE B	4993341-001	4993342-001	4993343-001	4993344-001
ISO 100	—	4993346-001	—	4993345-001

TABLE 4

MODEL CODE SHAFT END	*● CARTRIDGE KIT (BUNA-N)	*● CARTRIDGE KIT (VITON®)
VMQ24525S140***	02-346970	02-346971
VMQ24525S160***	02-346968	02-346969
VMQ24525S180***	02-346966	02-346967
VMQ24525S195***	02-346964	02-346965
VMQ24525S215***	02-346962	02-346963

Viton® is a registered trademark of E.I. Dupont Co.

Model Code

VMQ2	**	**	S	***	***	*	0	**	00	*	*	*	*	*	*	*	*	00	*	0	32
1 2 3 4	5 6	7 8	9	10 11 12	13 14 15	16	17	18 19	20 21	22	23	24	25	26	27	28	29	30 31	32	33	34 35

1 2 3 4 Series designation

VMQ2 – Vane pump double series

5 6 Frame size (front section)

45 – 140-215 cm^3/r (8.54-13.12 in^3/r)

7 8 Frame size (rear section)

25 – 10-90 cm^3/r (0.62-5.49 in^3/r)

9 Pump type

S – Standard

10 11 12 Displacement (front section)

Frame size 45

140 – 140 cm^3/r (8.54 in^3/r)
160 – 160 cm^3/r (9.76 in^3/r)
180 – 180 cm^3/r (10.98 in^3/r)
195 – 195 cm^3/r (11.89 in^3/r)
215 – 215 cm^3/r (13.12 in^3/r)

13 14 15 Displacement (rear section)

Frame size 25

010 – 10 cm^3/r (0.62 in^3/r)
016 – 16 cm^3/r (0.98 in^3/r)
020 – 20 cm^3/r (1.23 in^3/r)
025 – 25 cm^3/r (1.58 in^3/r)
032 – 32 cm^3/r (1.96 in^3/r)
040 – 40 cm^3/r (2.44 in^3/r)
045 – 45 cm^3/r (2.75 in^3/r)
050 – 50 cm^3/r (3.05 in^3/r)
063 – 63 cm^3/r (3.84 in^3/r)
071 – 71 cm^3/r (4.33 in^3/r)
080 – 80 cm^3/r (4.88 in^3/r)
090 – 90 cm^3/r (5.49 in^3/r)

16 Front flange mounting style

B – SAE C 2-bolt
127,00 (5.000) x 12,4 (0.49) pilot
17,6 (0.69) slots on
181,0 (7.13) bolt circle

D – ISO 3019/2 125A2HW 2-bolt
125,00 (4.921) x 9,2 (0.36) pilot
18,1 (0.71) slots on
180,0 (7.09) bolt circle

17 Adapter flange

0 – None (standard double pump)

18 19 Input shaft type*

01 – SAE J744 keyed
Frame size 45:
38,10 (1.500)

02 – SAE J744 splined
Frame size 45: C-C

03 – ISO 3019/2 keyed
Frame size 45:
40,00 (1.575)

05 – SAE J744 keyed
Frame size 45:
44,45 (1.750)

06 – SAE J744 splined
Frame size 45: D

09 – SAE J744 Spline
Frame size 45: C

20 21 Output shaft coupling

00 – None (standard double pump)

22 Inlet port type

A – SAE J518 4-split flange
B – ISO 6162 4-bolt flange

23 Front outlet port type

A – SAE J518 4-bolt flange
B – ISO 6162 4-bolt flange

24 Rear outlet port type

A – SAE J518 4-bolt flange
B – ISO 6162 4-bolt flange

25 Front outlet port position

Viewed from cover end of pump

A – Opposite inlet port
B – 90° CCW to inlet port
C – In-Line with front inlet port
D – 90° CW to inlet port

26 Rear outlet port position

Viewed from cover end of pump

A – 135° CCW to inlet port
B – 45° CCW to inlet port
C – 45° CW to inlet port
D – 135° CW to inlet port

27 Shaft Seal

A – Single, primary
B – Double, secondary (spring side out) Recommended for wet mount applications

28 Seal Type

N – Buna-N
V – Viton
W – Buna-N with Viton shaft seal(s)

29 Shaft rotation

Viewed from shaft end of pump

L – Left Hand (CCW)
R – Right Hand (CW)

30 31 Special features

00 – None

32 Paint

O – None
A – Blue

33 Customer identification

O – None

34 35 Design code

32 – 32 design
Installation dimensions remain unchanged for design numbers 30 to 39 inclusive.

* Verify shaft torque ratings meet or exceed input torque requirements

Eaton
14615 Lone Oak Road
Eden Prairie, MN 55344
USA
Tel: 952 937-9800
Fax: 952 974-7722
www.hydraulics.eaton.com

Eaton
20 Rosamond Road
Footscray
Victoria 3011
Australia
Tel: (61) 3 9319 8222
Fax: (61) 3 9318 5714

Eaton
Dr.-Reckeweg-Str. 1
D-76532 Baden-Baden
Germany
Tel: (49) 7221 682-0
Fax: (49) 7221 682-788

© 2003 Eaton Corporation
All rights reserved
Printed in USA
Document No. V-PUVN-TP010-E
June 2003 1M