EATON | Vickers

# High Pressure, High Performance Triple Vane Pumps

Parts Data

VMQ3453525S Series
– 32 Design

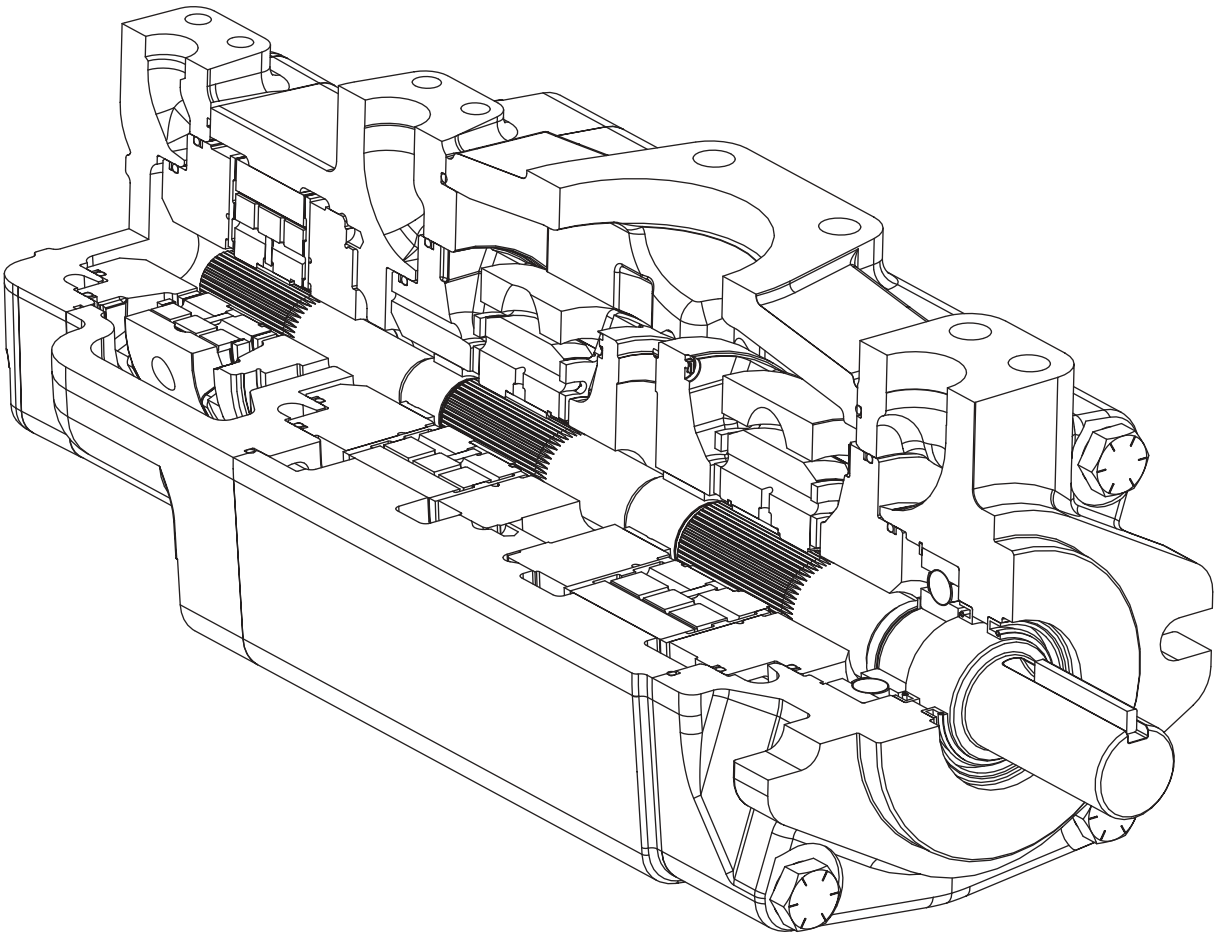

VICKERS®

# High Pressure, High Performance Triple Vane Pump VMQ3453525S Series — 32 Design

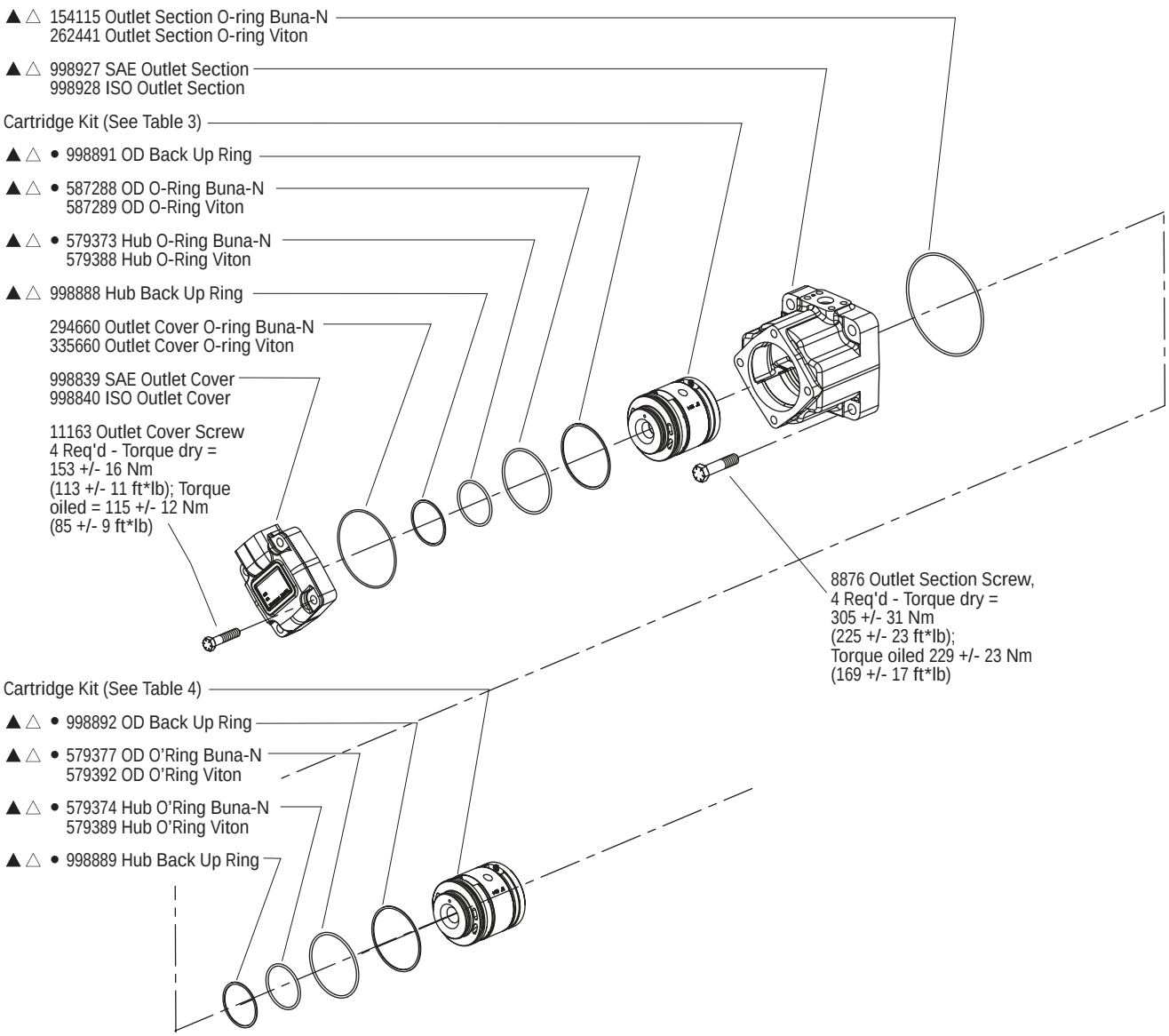

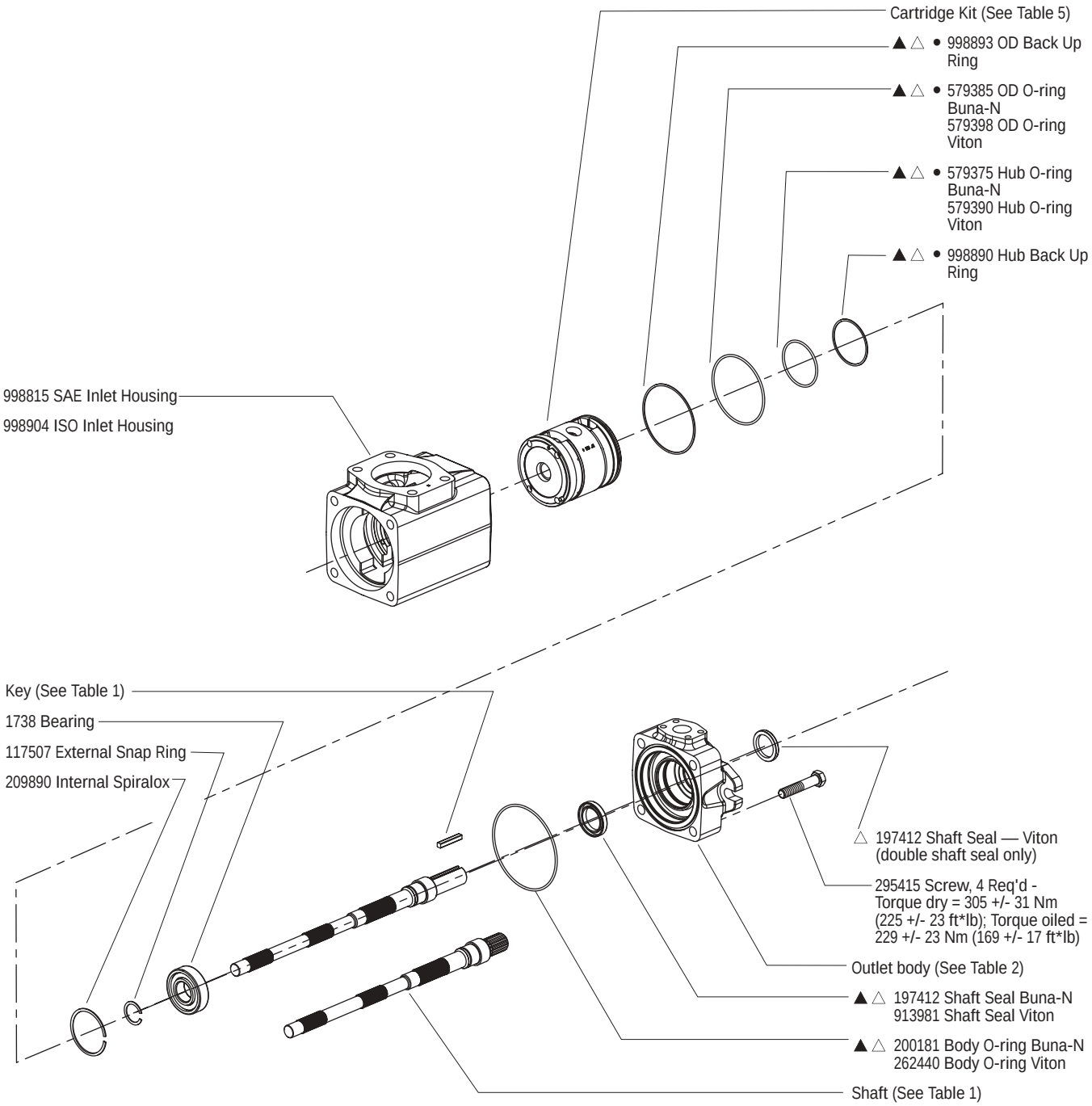


**Note**: Lubricate all parts and seals with a thin coat of oil at assembly.

- • Included in Cartridge Kit (see table 3-5)
- ▲ Included in Single STD Seal Kit 02-346523 or Viton Seal Kit 02-346532.
- △ Included in Doublt STD Seal Kit 02-346531 or Viton Seal Kit 02-346533.
- * With double and triple pumps, the orientation of the kits is such that the kit rotation is a reverse of the pump rotation. See tables X1 and X2 for the correct kit rotation relative to the pump rotation.

**TABLE X1**

**Cartridge Kit Rotation for Right Hand Rotation Pump**

R= Right Hand Rotation L=Left Hand Rotation

| PUMP ROTATION | SHAFT END KIT ROTATION | CENTER KIT ROTATION | COVER END KIT ROTATION |
|---|---|---|---|
| Triple (R) | (R) | (L) | (L) |

*Notes:
- A right hand rotation pump has the shaft turning clockwise when viewed from the input shaft end
- When ordering a right hand rotation kit, the part number will not have a suffix.

**TABLE X2**

**Cartridge Kit Rotation for Left Hand Rotation Pump**

R= Right Hand Rotation L=Left Hand Rotation

| PUMP ROTATION | SHAFT END KIT ROTATION | CENTER KIT ROTATION | COVER END KIT ROTATION |
|---|---|---|---|
| Triple (L) | (L) | (R) | (R) |

*Notes:
- A left hand rotation pump has the shaft turning counterclockwise when viewed from the input shaft end
- When ordering a left hand rotation kit, the part number will have a suffix of '-L'

**TABLE 1**

| MODEL CODE | 30TH DESIGN SHAFT | 31ST & 32ND DESIGN SHAFT | KEY |
|---|---|---|---|
| 3453525VMQ–***–***–*–*–01 | 997092 | 4993377-001 | 928542 |
| 3453525VMQ–***–***–*–*–02 | 997080 | 4993376-001 | — |
| 3453525VMQ–***–***–*–*–03 | 997093 | 4993378-001 | 928547 |
| 3453525VMQ–***–***–*–*–05 | 997094 | 4993379-001 | 928543 |
| 3453525VMQ–***–***–*–*–06 | 997095 | 4993380-001 | — |
| 3453525VMQ–***–***–*–*–09 | 997096 | 4993381-001 | — |

**TABLE 2**

OUTLET BODY

| **Flange Mounting Style** | **Single Shaft Seal** | | **Double Shaft Seal** | |
|---|---|---|---|---|
| | **Inch Port Threads** | **Metric Port Threads** | **Inch Port Threads** | **Metric Port Threads** |
| SAE B | 998754 | 998748 | 998755 | 998749 |
| ISO 100 | — | 998756 | — | 998757 |

**TABLE 3**

| MODEL CODE COVER END | * ● CARTRIDGE KIT (BUNA-N) | * ● CARTRIDGE KIT (VITON®) |
|---|---|---|
| VMQ3453525S***-***-010 | 02-465574 | 02-465569 |
| VMQ3453525S***-***-016 | 02-465575 | 02-465570 |
| VMQ3453525S***-***-020 | 02-465576 | 02-465571 |
| VMQ3453525S***-***-025 | 02-465578 | 02-465572 |
| VMQ3453525S***-***-032 | 02-465577 | 02-465573 |
| VMQ3453525S***-***-040 | 02-348974 | 02-348981 |
| VMQ3453525S***-***-045 | 02-348975 | 02-348982 |
| VMQ3453525S***-***-050 | 02-348976 | 02-348983 |
| VMQ3453525S***-***-063 | 02-348977 | 02-348984 |
| VMQ3453525S***-***-071 | 02-348978 | 02-348985 |
| VMQ3453525S***-***-080 | 02-348979 | 02-348986 |
| VMQ3453525S***-***-090 | 02-348980 | 02-348987 |

**TABLE 4**

| MODEL CODE CENTER SECTION | * ● CARTRIDGE KIT (BUNA-N) | * ● CARTRIDGE KIT (VITON®) |
|---|---|---|
| VMQ3453525S***-090-*** | 02-465621 | 02-465622 |
| VMQ3453525S***-100-*** | 02-465623 | 02-465624 |
| VMQ3453525S***-112-*** | 02-465625 | 02-465626 |
| VMQ3453525S***-125-*** | 02-465627 | 02-465628 |
| VMQ3453525S***-135-*** | 02-465629 | 02-465630 |
| VMQ3453525S***-140-*** | 02-465631 | 02-465632 |
| VMQ3453525S***-158-*** | 02-465633 | 02-465634 |

**TABLE 5**

| MODEL CODE SHAFT END | * ● CARTRIDGE KIT (BUNA-N) | * ● CARTRIDGE KIT (VITON®) |
|---|---|---|
| VMQ3453525-140-***-*** | 02-346970 | 02-346971 |
| VMQ3453525-160-***-*** | 02-346968 | 02-346969 |
| VMQ3453525-180-***-*** | 02-346966 | 02-346967 |
| VMQ3453525-195-***-*** | 02-346964 | 02-346965 |
| VMQ3453525-215-***-*** | 02-346962 | 02-346963 |

# Model Code

| VMQ3 | ** | ** | 25 | *** | *** | *** | * | ** | * | * | * | * | * | * | * | 00 | * | 0 | 32 |
|---|---|---|---|---|---|---|---|---|---|---|---|---|---|---|---|---|---|---|---|
| 1 2 3 4 | 5 6 | 7 8 | 9 10 | 11 12 13 | 14 15 16 | 17 18 19 | 20 | 21 22 | 23 | 24 | 25 | 26 | 27 | 28 | 29 | 30 31 | 32 | 33 | 34 35 |

**1 2 3 4 Series designation**

VMQ3 – Vane pump triple series

**5 6 Frame size (front section)**

45 – 140-215 cm $^3$/r (8.54-13.12 in $^3$/r)

**7 8 Frame size (middle section)**

35 – 90-158 cm $^3$/r (5.49-9.64 in $^3$/r)

**9 10 Frame size (rear section)**

25 – 10-90 cm $^3$/r (0.62-5.49 in$^3$/r)

**11 12 13 Displacement (front section)**

Frame size 45

140 – 140 cm $^3$/r (8.54 in $^3$/r)
160 – 160 cm $^3$/r (9.76 in $^3$/r)
180 – 180 cm $^3$/r (10.98 in $^3$/r)
195 – 195 cm $^3$/r (11.89 in $^3$/r)
215 – 215 cm $^3$/r (13.12 in $^3$/r)

**14 15 16 Displacement (middle section)**

Frame size 35

090 – 90 cm $^3$/r (5.49 in $^3$/r)
100 – 100 cm $^3$/r (6.10 in $^3$/r)
112 – 112 cm $^3$/r (6.83 in $^3$/r)
125 – 125 cm $^3$/r (7.63 in $^3$/r)
135 – 135 cm $^3$/r (8.24 in $^3$/r)
140 – 140 cm $^3$/r (8.54 in $^3$/r)
158 – 158 cm $^3$/r (9.64 in $^3$/r)

**17 18 19 Displacement (rear section)**

Frame size 25

010 – 10 cm $^3$/r (0.62 in $^3$/r)
016 – 16 cm $^3$/r (0.98 in $^3$/r)
020 – 20 cm $^3$/r (1.23 in $^3$/r)
025 – 25 cm $^3$/r (1.58 in $^3$/r)
032 – 32 cm $^3$/r (1.96 in $^3$/r)
040 – 40 cm $^3$/r (2.44 in $^3$/r)
045 – 45 cm $^3$/r (2.75 in $^3$/r)
050 – 50 cm $^3$/r (3.05 in $^3$/r)
063 – 63 cm $^3$/r (3.84 in $^3$/r)
071 – 71 cm $^3$/r (4.33 in $^3$/r)
080 – 80 cm $^3$/r (4.88 in $^3$/r)
090 – 90 cm $^3$/r (5.49 in $^3$/r)

**20 Front flange mounting style**

A – SAE C 2-bolt SAE J744 127-2
127,00 (5.000) x 12,4 (0.49) pilot
17,6 (0.69) slots on
181,0 (7.13) bolt circle

B – ISO 3019/2 125A2HW 2-bolt
125,00 (4.921) x 9,2 (0.36) pilot
18,1 (0.71) slots on
180,0 (7.09) bolt circle

**21 22 Input shaft type***

01 – SAE J744 keyed
Frame size 45: 38,10 (1.500)

02 – SAE J744 splined
Frame size 45: C-C

03 – ISO 3019/2 keyed
Frame size 45: 40,00 (1.575)

05 – SAE J744 keyed
Frame size 45: 44,45 (1.750)

06 – SAE J744 splined
Frame size 45: D

**23 Port type**

A – Inlet: SAE J518 4-bolt flange
Front outlet: SAE J518 4-bolt flange
Middle outlet: SAE J518 4-bolt flange
Rear outlet: SAE J518 4-bolt flange

B – Inlet: ISO 6162 4-bolt flange
Front outlet: ISO 6162 4-bolt flange
Middle outlet: ISO 6162 4-bolt flange
Rear outlet: ISO 6162 4-bolt flange

**24 Front outlet port position**
Viewed from cover end of pump

A – Opposite inlet port
B – 90° CCW to inlet port
C – In-line with inlet port
D – 90° CW to inlet port

**25 Middle outlet port position**
Viewed from cover end of pump

A – Opposite inlet port
B – 90° CCW to inlet port
C – In-line with inlet port
D – 90° CW to inlet port

**26 Rear outlet port position**
Viewed from cover end of pump

453525 units

E – Opposite inlet port
F – 90° CCW to inlet port
G – In-line with inlet port
H – 90° CW to inlet port

**27 Shaft seal**

A – Single, primary
B – Double, secondary (spring side out) Recommended for wet mount applications

**28 Seal type**

N – Buna N
V – Viton
W – Buna N with Viton shaft seal(s)

**29 Shaft rotation**
Viewed from shaft end of pump

L – Left hand (CCW)
R – Right hand (CW)

**30 31 Special features**

00 – None

**32 Paint**

0 – None
A – Blue

**33 Customer identification**

0 – None

**34 35 Design code**

32 – 32 design
Installation dimensions remain unchanged for design numbers 31 to 39 inclusive.

* Verify shaft torque ratings meet or exceed input torque requirements

Eaton
14615 Lone Oak Road
Eden Prairie, MN 55344
USA
Tel: 952 937-9800
Fax: 952 974-7722
www.hydraulics.eaton.com

Eaton
20 Rosamond Road
Footscray
Victoria 3011
Australia
Tel: (61) 3 9319 8222
Fax: (61) 3 9318 5714

Eaton
Dr.-Reckeweg-Str. 1
D-76532 Baden-Baden
Germany
Tel: (49) 7221 682-0
Fax: (49) 7221 682-788

© 2003 Eaton Corporation
All rights reserved
Printed in USA
Document No. V-PUVN-TP013-E
June 2003 1M