Service Data

Vickers®

Vane Pumps

Vane Type Single Pump

35VQ**A-86* - 20(L)
36VQ**A-86 - 20(L)

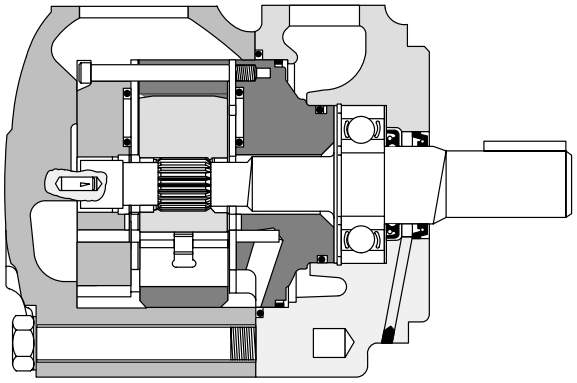

⊖ TO REVERSE CATRIDGE KIT ROTATION, REMOVE THE TWO (2) 410609 SCREWS, AND REVERSE THE LOCATION OF THE INLET SUPPORT PLATE 430806 AND OUTLET SUPPORT PLATE 412003. REINSTALL THE TWO (2) SCREWS HAND TIGHT. USE PUMP COVER TO ALIGN ALL SECTIONS OF THE CARTRIDGE. REMOVE COVER CAREFULLY AND TIGHTEN SCREWS TO 100 LB. IN. TORQUE.

□ WIPE O.D. OF SEAL WITH OIL BEFORE PRESSING INTO BODY. APPLY GREASE TO SEAL I.D. BEFORE INSTALLATION OF SHAFT.

▲INCLUDED IN SINGLE SHAFT SEAL KIT 920015

F3 EQUIVALENT SINGLE SHAFT SEAL KIT 900029

▲△ INCLUDED IN DOUBLE SHAFT SEAL KIT 920016

F3 EQUIVALENT DOUBLE SHAFT SEAL KIT 920030

✳INCLUDED IN CARTRIDGE KIT

NOTE
BRONZE FACES MUST BE INSTALLED TOWARD THE ROTOR.

11173 BOLT (4 REQ'D)
OIL & TORQUE 150 ± 10 LB. FT

234248 COVER (INLET)

✳▲ 154101 "O-RING"

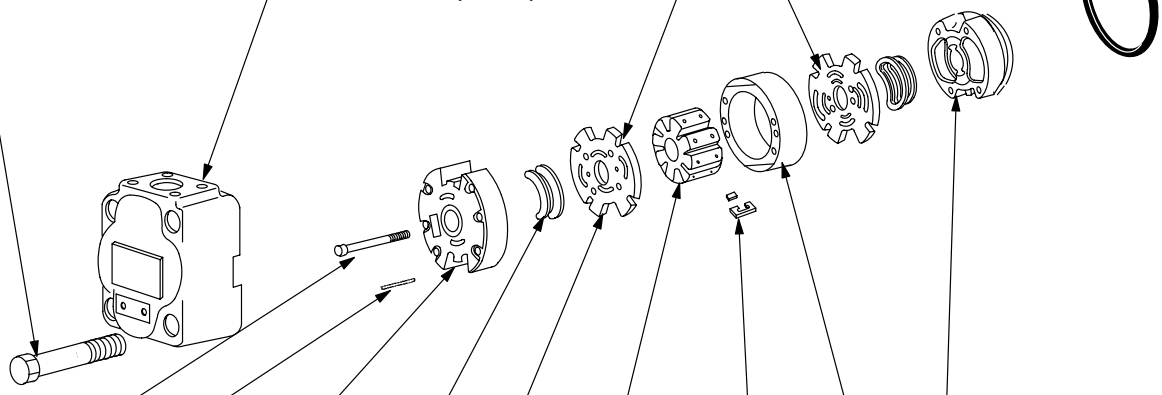

CAPACITY (USGPM)	SCREW (2 REQ'D)	PIN (2 REQ'D)	INLET SUPPORT PLATE	▲SEAL PACK (4 REQ'D)	◆FLEX-SIDE PLATE KIT	ROTOR	VANE KIT	RING	OUTLET SUPPORT PLATE	CART. KIT	F3 CART. KIT
THESE PARTS ARE INCLUDED IN CARTRIDGE KIT											
3*VQ21A	410609	418108	430806 (INCLUDES 327009 BUSHING)	433766 S/A	923953	262154	922700 (INCLUDES 10 VANES & 10 INSERTS	394962	412003	413420	421582
3*VQ25A								319396		413421	421583
3*VQ30A								319397		413422	421584
3*VQ35A								319398		413418	421585
3*VQ38A								319399		413419	421586

© Eaton Hydraulics, Incorporated 2000
All Rights Reserved

○ ASSEMBLE SEAL WITH SPRING LOADED SEALING MEMBER TOWARD BEARING.

● ASSEMBLE SEAL FLUSH WITH PILOT FACE WITH SPRING LOADED SEALING MEMBER FACING INWARD AS SHOWN.

MODEL	TYPE DRIVE	BEARING
35V-	DIRECT-	38441
36V-	INDIRECT-	239092

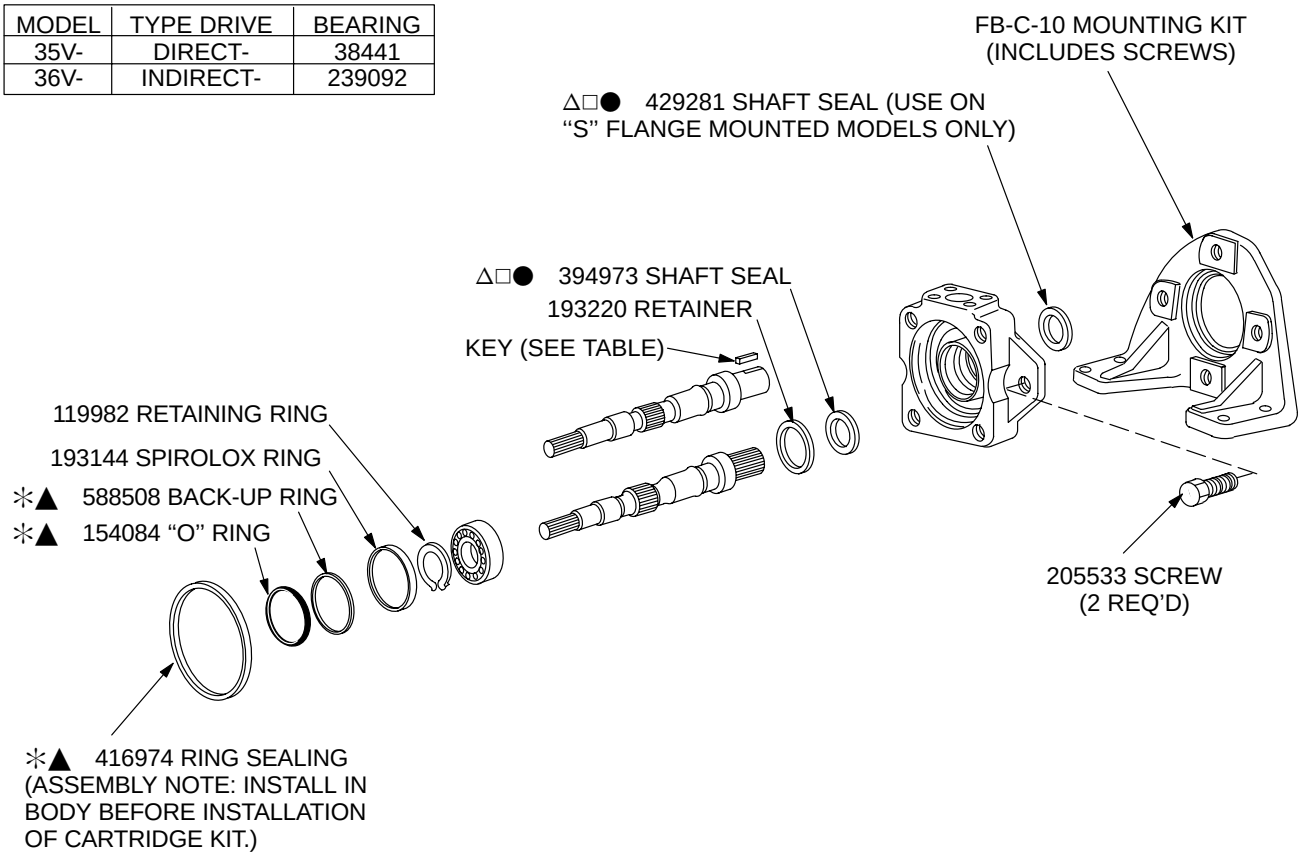

SHAFTS				KEY	TYPE
SINGLE SEAL MODELS		DOUBLE SEAL MODELS			
SHAFT NO.	PART NO.	SHAFT	PART NO.		
1	233624	——	——	88678	STRAIGHT - STANDARD
4	247803	——	——	——	SPLINE - 14 TOOTH
11	242287	——	——	——	SPLINE - 14 TOOTH
86	392669	——	——	393536	STRAIGHT - HEAVY DUTY

◆ **NOTE**
WHEN ORDERED INDIVIDUALLY, FLEX SIDE PLATE KIT INCLUDES (4) F3 SEAL PACK SUB ASSY’S.

SHARP EDGE OF VANE MUST LEAD DIRECTION OF ROTATION

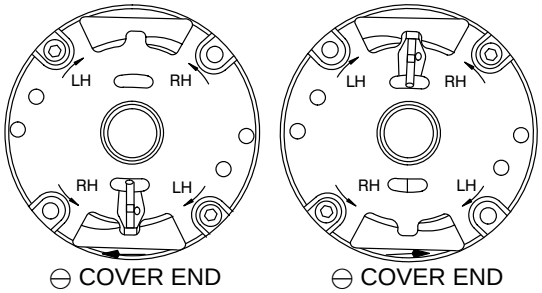

⊖ COVER END L.H. ROTATION

⊖ COVER END R.H. ROTATION

Model Code

(F3) - 35 VQ * * A * - * * * 20 (*)

1 2 3 4 5 6 7 8 9 10

1 Viton Seals

(Omit if not required.)

2 Series

3 Vane Type

4 SAE Rated Capacity

(Rating @ 1200 RPM - 100 psi)

21 - 21 USgpm
25 - 25 USgpm
30 - 30 USgpm
35 - 35 USgpm
38 - 38 USgpm

5 Port Connections

A - SAE 4-Bolt Flange

6 Mounting & Shaft Seals Assembly

F - Foot (Single Shaft Seal Assy.)
S - Flange (Double Shaft Seal Assy.)
Omitted- Flange (Single Shaft Seal Assy.)

7 Shafts

1 - Square Key
4 - Splined
11 - Splined
86 - Square Key

8 Port Positions

See Chart Below

9 Design

10 Rotation

(Viewed from Shaft End)
L - Left Hand (CCW Rotation)
Omitted - Right Hand Rotation

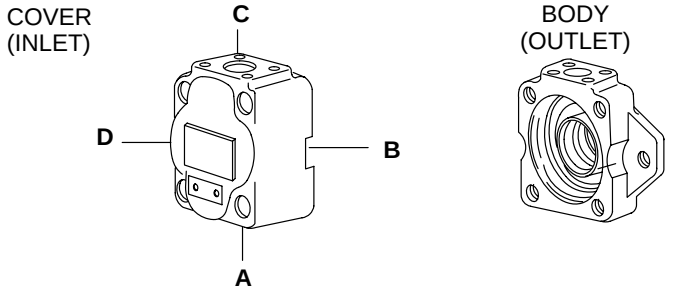

MODEL	INLET COVER POSITIONS (VIEWED FROM COVER END)
35VQ**A-***A-20(L)	OPPOSITE OUTLET PORT
35VQ**A-***B-20(L)	90° CLOCKWISE FROM OUTLET
35VQ**A-***C-20(L)	IN-LINE WITH OUTLET
35VQ**A-***D-20(L)	90° COUNTERCLOCKWISE FROM OUTLET

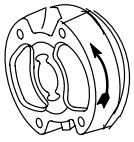

PARTS ORDERING

PARTS ARE THE SAME FOR BOTH RIGHT AND LEFT HAND ROTATION, WHEN ORDERING SPARE CARTRIDGE PARTS, IT IS RECOMMENDED THEY BE OBTAINED IN CARTRIDGE KITS. KITS ARE ASSEMBLED AND TESTED FOR EITHER RIGHT OR LEFT HAND ROTATION. IF LEFT HAND ROTATION IS REQUIRED, IT SHOULD BE SPECIFIED ON PARTS ORDER BY ADDING SUFFIX “L” TO KIT NUMBER. FOR EXAMPLE, 413420-L.

For satisfactory service life of these components, use full flow filtration to provide fluid which meets ISO cleanliness code 16/13 or cleaner. Selections from pressure, return, and in-line filter series are recommended.

Printed in U.S.A.