Service Data

Thru-Drive Vane Type Pump

(F3)-45VQT*(M)-**A(M)2-**-*-20/21–*

MODEL	ADAPTER PLATE	ADAPTER KIT	SPACER KIT	RETAINING RING	COUPLING	COUPLING KIT
VQTA	584936	941296	———	223172	426770	02-136810
VQTB	584922	941297		83003 (1)	584924	02-136813
VQTBP			02-136817	83003 (2)		02-136814
VQTC	581833	941298	———	103989	585658	02-136816

NOTE
FOR BP MODELS AN ADAPTER KIT AND SPACER KIT IS REQUIRED.

MODEL	SEAL KIT	F3 SEAL KIT
45VQTA-20	02-136800	02-136805
45VQTA-21	02-136875	02-136876
45VQTB-20	02-136806	02-136807
45VQTB-21	02-136877	02-136878
45VQTBP-20	02-136937	02-136938
45VQTBP-21	02-136943	02-136944
45VQTC-20	02-136808	02-136809
45VQTC-21	02-136879	02-136880

▲ Included in seal kit (See Table)
F3 equivalent seal kit (See Table)
● Included in cartridge kit (See Table)
◆ Included in coupling kit (See Table)
■ Included in adapter kit (See Table)
△ Included in spacer kit (BP models only)
Parts prefixed with symbols available only in kits.

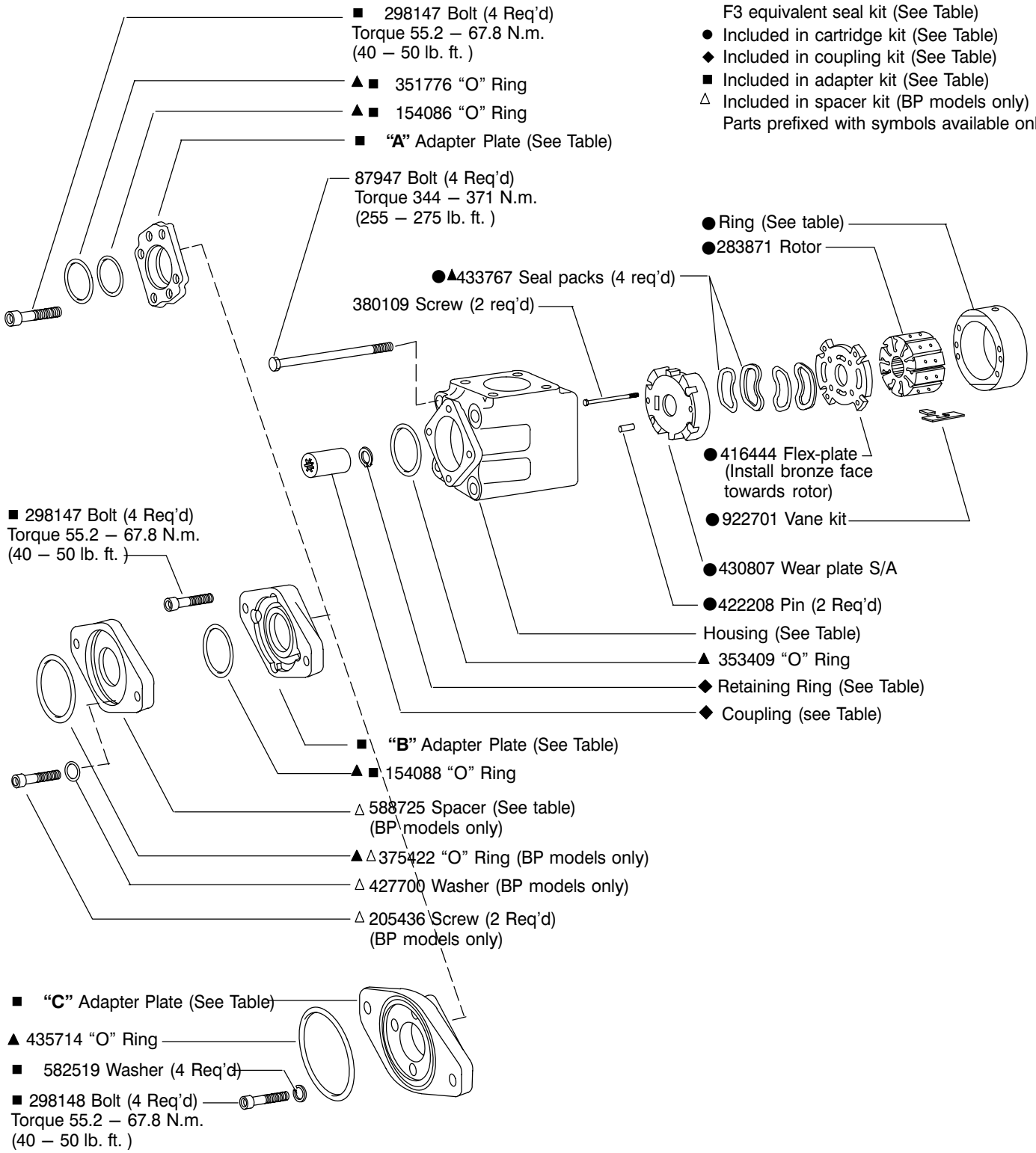

MODEL	SHAFT	KEY
45VQTAS−203	502418	239751
45VQTB(P)S−203	502419	
45VQTCS−203	502467	
45VQTAS−297	502475	———
45VQTB(P)S−297	502480	
45VQTCS−297	883274	

MODEL	HOUSING	BODY S/A
45VQT*S**A	252283	02-136923
45VQT*S**AM	478507	02-136924

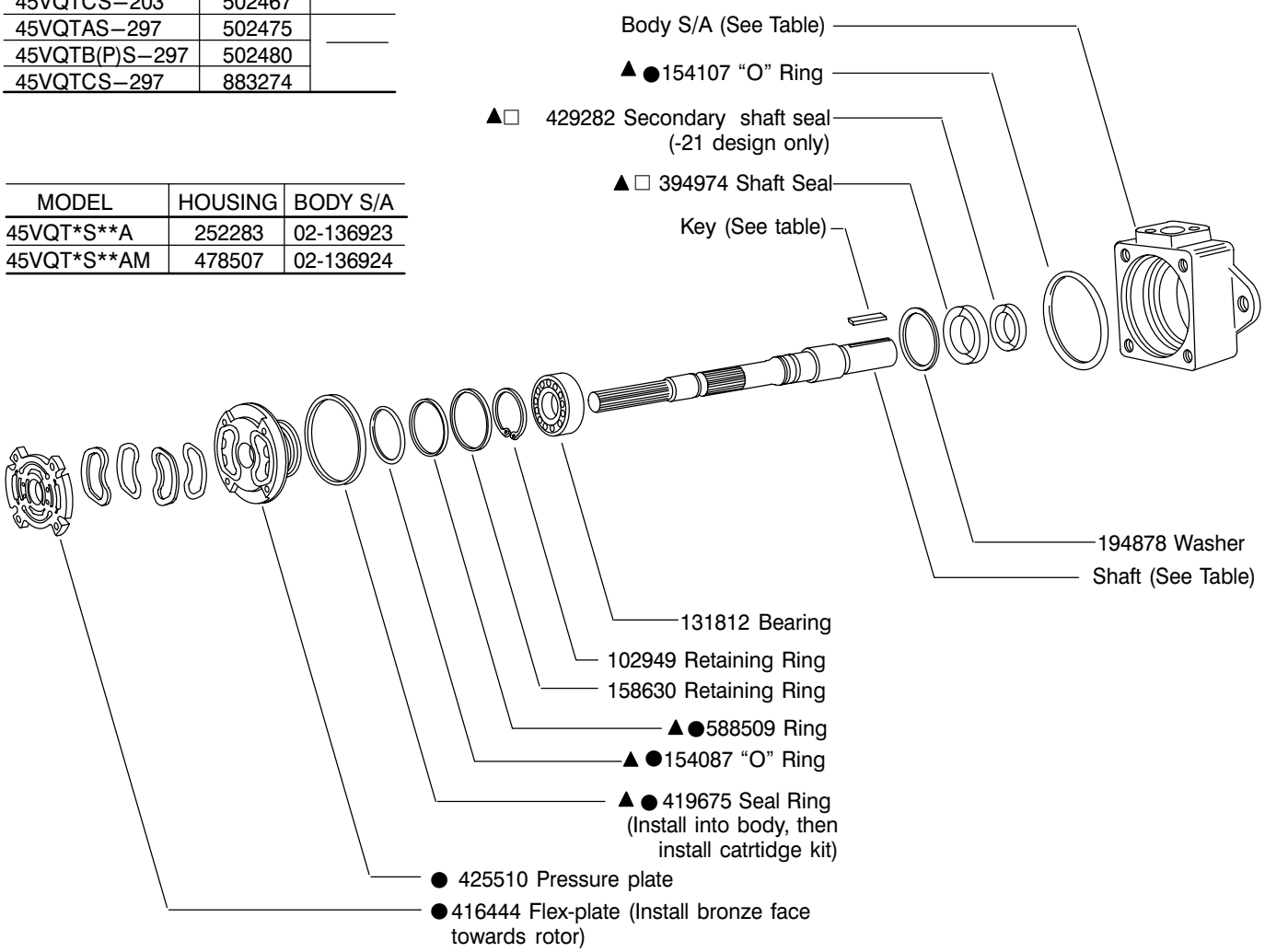

MODEL	RING	● CART KIT	F3 CART KIT
45VQT42	297510	416435	419511
45VQT50	297502	416436	419510
45VQT60	297503	416437	419509

NOTE:

For satisfactory service life of these components in industrial applications, use full flow filtration to provide fluid which meets ISO cleanliness code 16/13 or cleaner. OFP, OFR, and OFRS series filters are recommended.

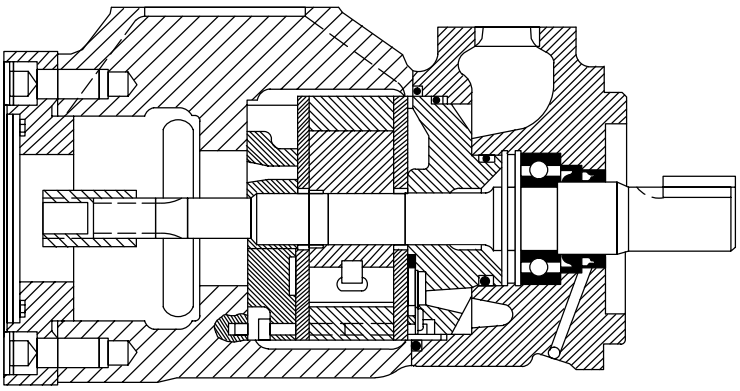

Model Code

(F3) — 45 VQT B S — 21 A M S 2 — 203 C A 21 R

1 2 3 4 5 6 7 8 9 10 11 12 13 14

1 Viton seals

Omit — Standard seals

2 Intravane pump series-Thru drive

45VQT — Standard bearing

3 Thru-drive connection mounting adapter

Code	SAE Designation	
	J744C	J744Oct83
A	A	82-2
B	B	101-2
BP	Special mounting with spacer for Vickers PVE19/21	
C	C	127-2

4 Front mounting flange

Model series	SAE Designation	
	J744C	J744Oct83
45VQT	C	127–2

5 Geometric displacement

Code - SAE rating (USgpm) at 1200 rpm, 6.9 bar (100 psi)

Frame Size	Code	cm^3/r	in^3/r
45VQT	42	138	8.41
	50	162	9.85
	60	193	11.75

6 Port connections

A — SAE 4-bolt flange

7 Metric threads on port connection

(Omit for inch threads.)

8 Double shaft seal

S — Double shaft seal
Blank — Single shaft seal

9 Thru—drive coupling

2 — SAE splined coupling included with pump

10 Shaft

203 — Straight key
297 — Splined

11 Outlet positions

(Viewed from adapter end of pump)

A — Opposite inlet port
B — 90° CCW from inlet
C — In line with inlet
D — 90° CW from inlet

12 Adapter mounting orientation

(Viewed from adapter end of pump)

Code	**A** adapter	**B** or **C** adapter
A —	Rotated 45° CW with respect to pump mtg. flg.	In line with pump mtg. flg.
B —	Rotated 45° CCW with respect to pump mtg. flg.	Rotated 90° with respect to pump mtg. flg.

13 Design

—20 design single shaft seal
—21 design double shaft seal

14 Rotation

(Viewed from shaft end of pump)

L — Left hand (counterclockwise)
R — Right hand (clockwise)

NOTE
To reverse cartridge kit rotation, remove the two screws and reverse the location of the inlet support plate and outlet support plate. Re—install the two screws hand tight. Use pump cover to align all sections of the cartridge. Carefully remove the cover and tighten the screws.

NOTE
When ordering spare cartridge parts, it is recommended they be obtained in cartridge kits. Kits are assembled and tested by Vickers for either right or left hand rotation. If left hand rotation is required, it should be specified on parts order by adding suffix “L” to cartridge kit number.

Sharp Edges of Vane Must Lead in Direction of Rotation

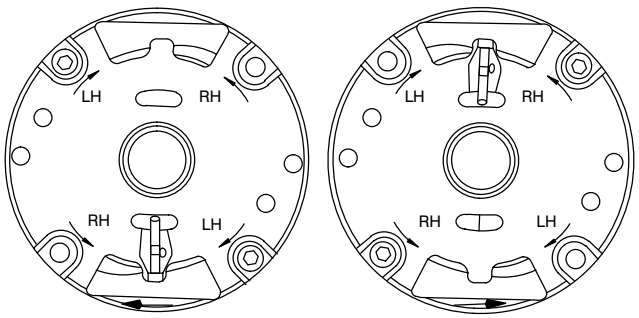

L.H. Rotation R.H. Rotation