Service Data

Vickers®

Vane Pumps

Double Thru-drive Vane Pumps

4525VQT Series (-20 Design)

Model	Adapter Plate	Adapter Kit	Spacer Kit	Retaining Ring	Coupling	Coupling Kit
4525VQTA	–	–	–	223172	426770	02-136810
4525VQTB	913385	02-159611	–	89447	584926	02-136811
4525VQTBP	913385	02-159611	02-136817	89447	452865	02-136812

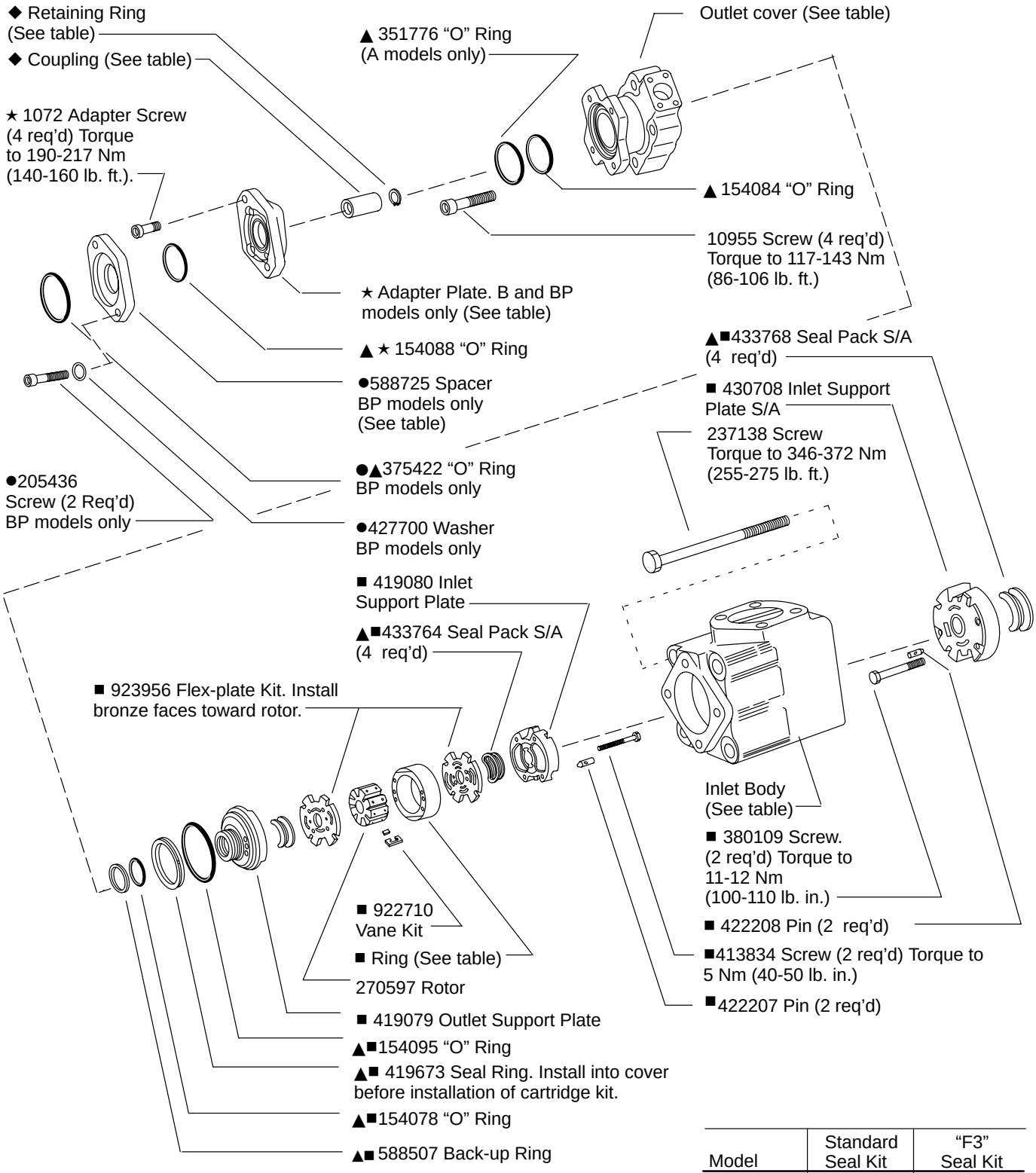

Model	Standard Seal Kit	"F3" Seal Kit
4525VQTA	02-159614	02-159618
4525VQTB	02-159615	02-159619

Front Pump Code (USgpm)	Rear Pump Code (USgpm)	■ Ring	Standard Cart. Kit	F3 Cart. Kit
42	–	297510	416435	419511
50		297502	416436	419510
60		297503	416437	419509
–	12	326984	421244	421576
	14	326985	421235	421577
	17	326986	421236	421578
	21	326988	421238	421580

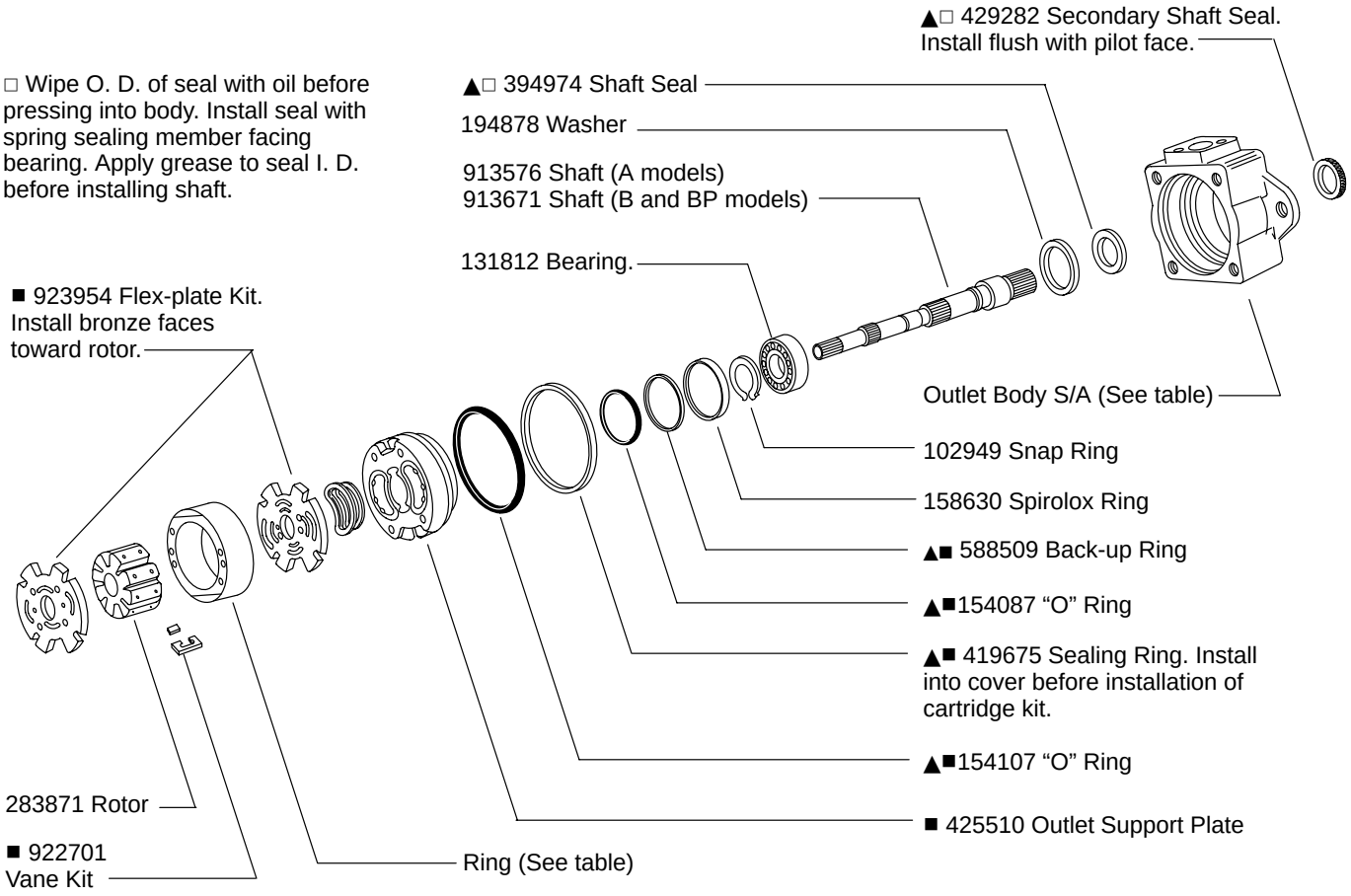

Model	Inlet Body	Outlet Cover	Outlet Body S/A
4525VQT*S**A	370071	913259	02-136923
4525VQT*S**AM	875778	913582	02-136924

NOTE: Parts prefixed with symbols are available only in kits.

▲ Included in standard seal kit. See table for standard and F3 kits.

■ Included in cartridge kit. See table.

◆ Included in coupling kit. See table.

★ Included in adapter kit. See table. "O" ring in adapter kit is 262413 (F3).

● Included in spacer kit (BP models only).

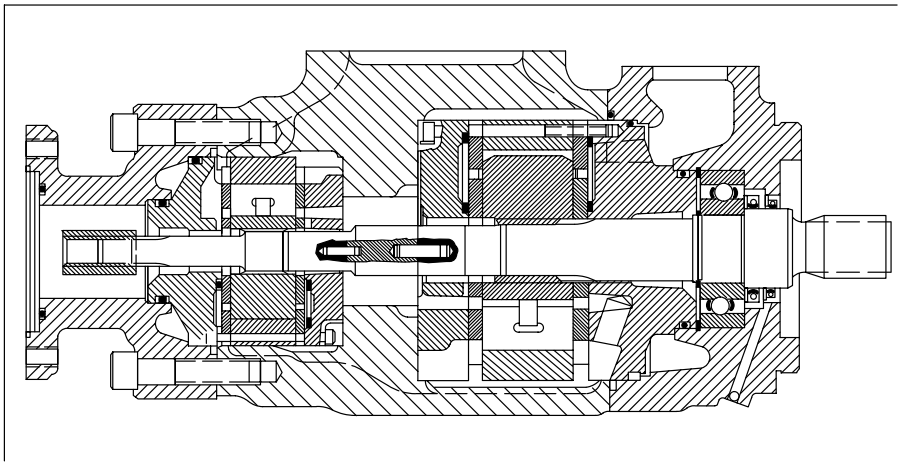

Model Code

(F3) - 4525 VQT * S - ** A * ** (S) - 2 297 ** (*) - 20 *

1 2 3 4 5 6 7 8 9 10 11 12 13 14

1 F3 – Viton seals
Omit if not required.

2 Series designation
4525VQT

3 Thru-drive (rear) 2-bolt mounting flange
A – SAE "A" flange
B – SAE "B" adapter flange
BP – SAE "B" flange with spacer for Vickers PVE12, 19, or 21 pump

4 Front mounting flange
S – SAE J-744 (127-2)

5 Geometric displacement, front end pump
Code = SAE rating (USgpm) at 1200 rpm and 6,9 bar (100 psi)

Code	cm^3/r	in^3/r
42	139	8.46
50	162	9.90
60	193	11.80

6 Port connections
A – SAE 4-bolt flange
AM – Metric 4-bolt flange (Flange pads stamped "M" for metric threads)

7 Geometric displacement, rear end pump
Code = SAE rating (USgpm) at 1200 rpm and 6,9 bar (100 psi)

Code	cm^3/r	in^3/r
12	40	2.45
14	45	2.77
17	55	3.37
21	68	4.12

8 Shaft seal assembly
S – Double seal
– Omit for single seal.

9 Thru-drive coupling
2 – With spline for tandem pump

10 Shaft
297 – Splined "C" size per SAE J744C. 32-4 per SAE J744 Oct 83

11 Port position
(Viewed from rear end of pump)

With no. 1 outlet opposite inlet
AA – No. 2 outlet 135° CCW from inlet
AB – No. 2 outlet 45° CCW from inlet
AC – No. 2 outlet 45° CW from inlet
AD – No. 2 outlet 135° CW from inlet

With no. 1 outlet 90° CCW from inlet
BA – No. 2 outlet 135° CCW from inlet
BB – No. 2 outlet 45° CCW from inlet
BC – No. 2 outlet 45° CW from inlet
BD – No. 2 outlet 135° CW from inlet

With no. 1 outlet in line with inlet
CA – No. 2 outlet 135° CCW from inlet
CB – No. 2 outlet 45° CCW from inlet
CC – No. 2 outlet 45° CW from inlet
CD – No. 2 outlet 135° CW from inlet

With no. 1 outlet 90° CW from inlet
DA – No. 2 outlet 135° CCW from inlet
DB – No. 2 outlet 45° CCW from inlet
DC – No. 2 outlet 45° CW from inlet
DD – No. 2 outlet 135° CW from inlet

12 Thru-drive (rear) mounting flange position
(Viewed from rear end of pump)
A – In line with no. 2 outlet port
B – 90° from no. 2 outlet port
– Omit for 4525VQTA models.

13 Design

14 Rotation
(Viewed from front end of pump)
L – Left hand (counterclockwise)
R – Right hand (clockwise)

Standard right-hand shaft rotation cartridges are shown at right. To reverse rotation, remove two screws and reverse the location of the inlet and outlet support plates. Re-align all sections of the cartridge, then re-install and hand-tighten the two screws. Tighten screws to recommended torque.

When ordering spare cartridge parts, it is recommended they be obtained in kits. Kits are assembled and tested for either right or left hand rotation. If left hand rotation is required, specify on parts order by adding suffix "L" to cartridge kit number.

Sharp edge of vane must lead in direction of rotation.

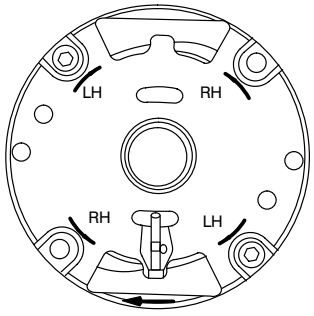

Rear Cartridge.
Right Hand Rotation.

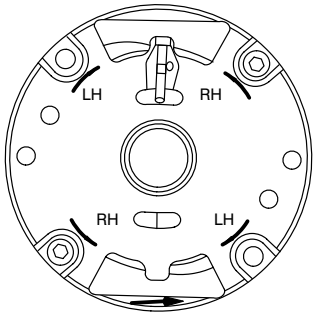

Front Cartridge.
Right Hand Rotation.

Printed in U.S.A.