Service Data

Vickers®

Vane Pumps

Vane Type Triple Pump

(F3)–2520VQSV10*–*****–*******–20*

10 SAE rated capacity (V10 cover end cartridge)

USgpm	○Rotor	○Vane Kit (12 vanes)	○Ring	Pin (V10S)	Pin (V10F/V10P)	Bolt (V10S)	Bolt (V10F)	Bolt (V10P)	○Cartridge Kit
1	317681	923499	317674	2456	2456	11156	295344	295344	923471
2			317675						923470
3			317676						923496
4	351247	923500	317677	16662	16662	1278	432511	432511	923469
5			317678						923468
6	357286	923501	355641	179341	179341	432509	295346	295346	923497
7			331813						923498

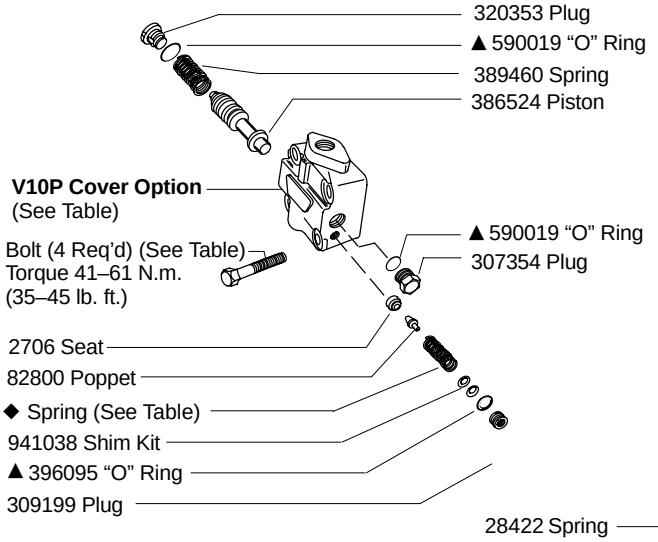

9 V10 port connection

Code	V10S Cover	V10F Cover	V10P Cover
P	372863	379543	———
R	372864	———	———
S	372865	———	———
Y	377829	———	———
T	———	372851	———
K	———	———	388262

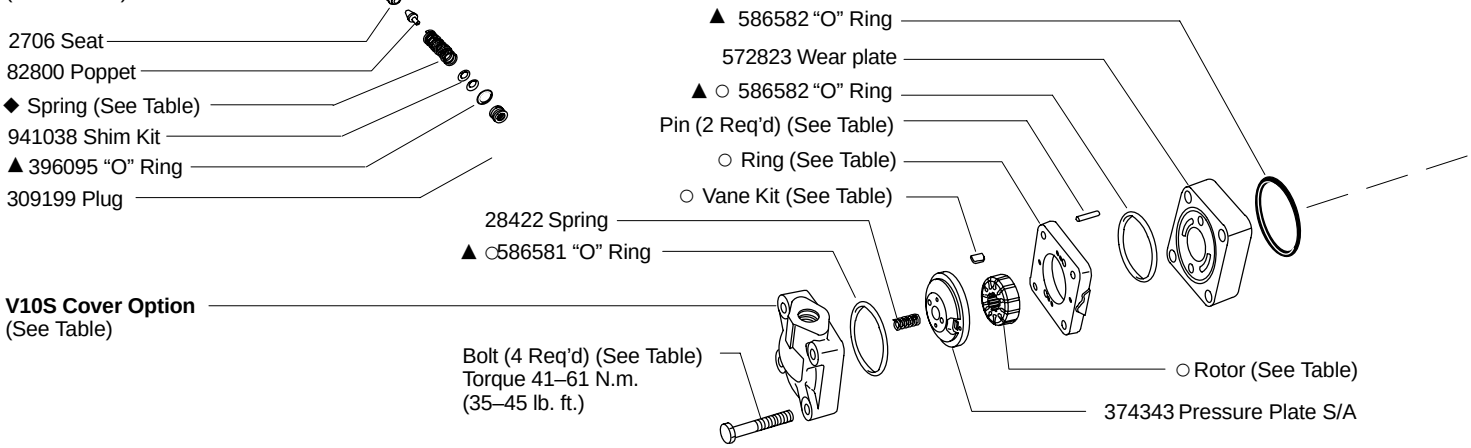

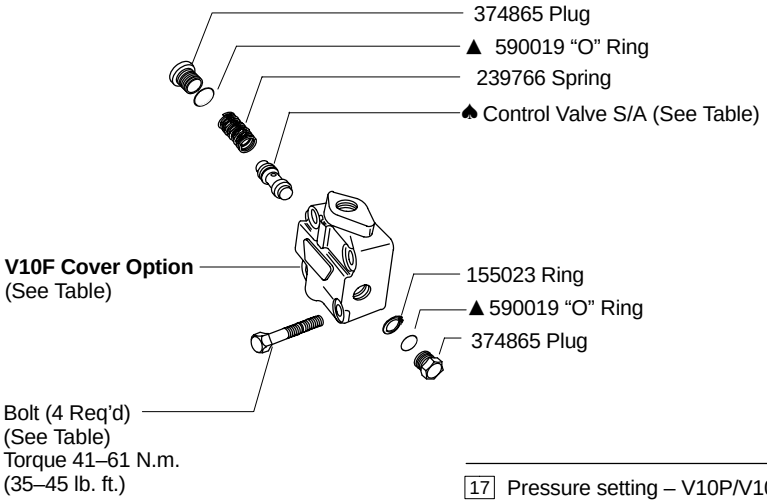

17 Pressure setting – V10P/V10F (Omit for V10S)

Code	Pressure setting V10P/V10F	◆V10P Spring	♠ V10F control valve S/A
A	250 psi	252886	229613
B	500 psi	2280	233018
C	750 psi		232794
D	1000 psi	2282	232795
E	1250 psi		232796
F	1500 psi	2281	232797
G	1750 psi		232798
H	2000 psi		232799
J	2250 psi		233019
K	2500 psi		233020

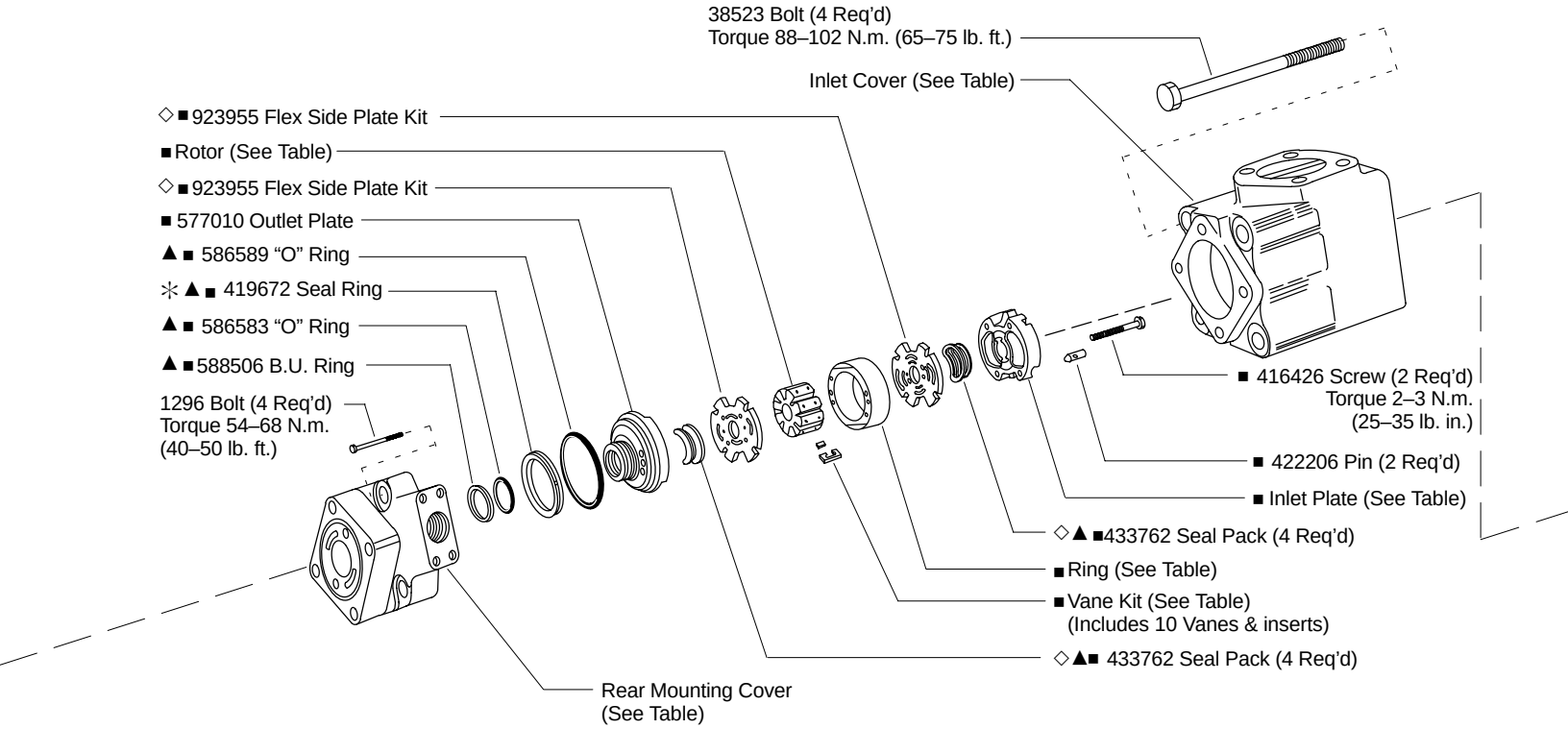

8 SAE rated capacity (**20 VQ center cartridge)

■USgpm	■Ring	■Inlet Plate	■ Rotor	■Vane Kit	■ F3 Cart. Kit
5	333624	419502	402690	922741	574918
8	333625				574920
9	374799				574921
11	333626	419501	403539	922745	574922
12	353901				574923
14	353902				574924

● Included in 25** VQ shaft end cartridge kit.

■ Included in **20 VQ center cartridge kit.

○ Included in V10 cover end cartridge kit.

▲ Included in seal kit 920166. (Kit contains F3 components & both shaft seals.)

◇ Included in flex side plate kit; bronze face of plate must be installed toward the rotor. Kit also contains four seal packs.

□ Assemble seal with spring loaded sealing member towards bearing. Seals to be completely wetted with oil prior to assembly.

✻ Install 419673 & 419672 sealing ring into body, then install cartridge kit.

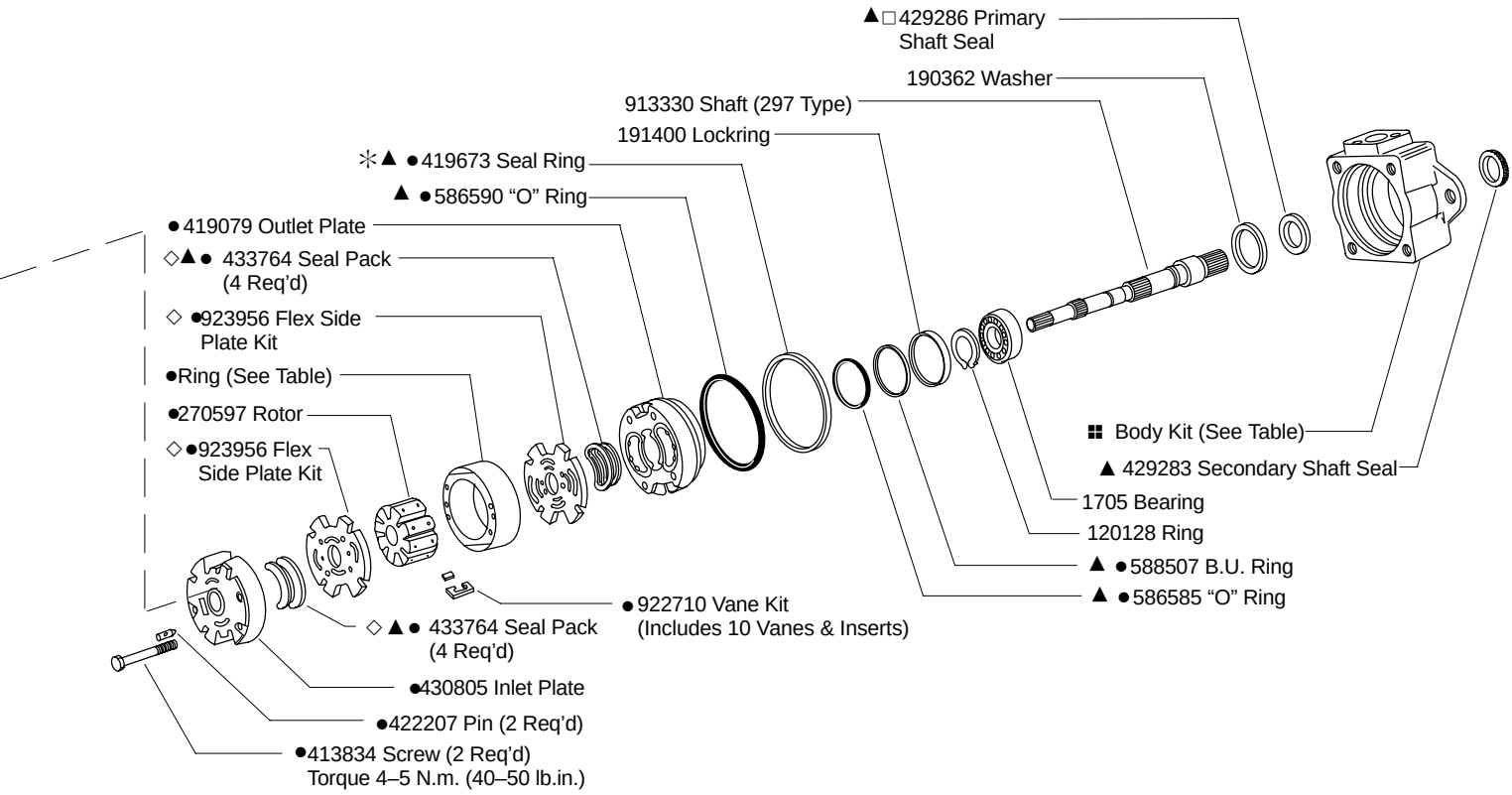

6 SAE rated capacity (25**VQ shaft end cartridge)

●USgpm	●Ring	●F3 Cart. Kit
10	326989	02–125589
12	326984	421570
14	326985	421571
16	424084	578174
17	326986	421572
19	326987	421573
21	326988	421574

7 Port connections

Connection Type	⠿ Body Kit	Inlet Cover	Rear Mounting Cover
A – 4 Bolt Flange (Inch)	02–136915	251263	572822
AM – 4 Bolt Flange (Metric)	02–136916	478505	860778

⠿ NOTE: Body kit includes body, ball, and plug. (Ball and plug not shown)

Model Code

(F3) - 2520VQ S V10 * - * * * * * - * * * * * * * - 20 *

1 2 3 4 5 6 7 8 9 10 11 12 13 14 15 16 17 18 19

1 **Special seals**

F3 – Vition "O"Rings and shaft seals

2 **Pump series designation**

25VQ** – Shaft end pump
****20VQ** – Center pump

3 **Body mounting flange**

S – SAE mounting per J–744 101–2

4 **Pump series designation**

V10 cover end pump

5 **V10 pump cover options**

S – Standard cover
F – Flow control and relief cover
P – Priority valve and relief cover

6 **SAE rated capacity (VQ shaft – end cartridge)**

Code	Code
10 – 10 USgpm	
12 – 12 USgpm	**17** – 17 USgpm
14 – 14 USgpm	**19** – 19 USgpm
16 – 16 USgpm	**21** – 21 USgpm

7 **VQ port connections (inlet & outlet #1 & #2)**

A – 4 bolt flange (inch thread)
AM – 4 bolt flange (metric thread)

8 **SAE rated capacity (VQ center cartridge)**

Code	Code
5 – 5 USgpm	**11** – 11 USgpm
6 – 6 USgpm	**12** – 12 USgpm
8 – 8 USgpm	**14** – 14 USgpm
9 – 9 USgpm	

9 **V10 port connections**

V10S standard covers and outlet # 3

Code	
S –	.750–16 Str. thd.
P –	$^1/_2$ " – NPT thd.
Y –	.875–14 Str. thd.
R –	1.062–12 Str. thd.

V10F flow/relief control cover

Code	Outlet # 3	Tank port
T –	.750–16 Str. thd	.750–16 Str. thd.
P –	.750–16 Str. thd.	$^1/_2$ " – NPT thd.

V10P priority control covers

Code	Primary port Str. thd	Secondary port Str. thd.	Tank port Str. thd
K –	.5625–18	.750–16	.5625 –18

10 **SAE rated capacity (V10 cover end cartridge)**

Code	Code
1 – 1 USgpm	**5** – 5 USgpm
2 – 2 USgpm	**6** – 6 USgpm
3 – 3 USgpm	**7** – 7 USgpm
4 – 4 USgpm	

11 **Shaft seal**

Blank – Single seal
S – Double seal

12 **Shaft type**

297 – All series

13 **Port orientation (Outlet #1)**

(Viewed from cover end of pump; refer to table on next page)

14 **Port orientation (Outlet #2)**

(Viewed from cover end of pump; refer to table on next page)

15 **Port orientation (Outlet #3 or primary outlet)**

(Viewed from cover end of pump; refer to table on next page)

16 **Controlled flow rate, V10F & V10P (Omit for standard cover)**

Code	Code
3 – 3 USgpm	**6** – 6 USgpm
4 – 4 USgpm	**7** – 7 USgpm
5 – 5 USgpm	**8** – 8 USgpm

17 **Relief valve pressure setting, V10F & V10P (Omit for standard cover)**

Code	Code
A – 250 psi	**F** – 1500 psi
B – 500 psi	**G** – 1750 psi
C – 750 psi	**H** – 2000 psi
D – 1000 psi	**J** – 2250 psi
E – 1250 psi	**K** – 2500 psi

18 **Design** (Subject to change)

19 **Rotation (Viewed from shaft end of pump)**

L – Left hand for counterclockwise
R – Right hand for clockwise

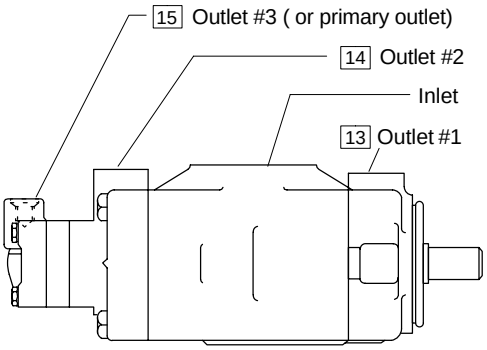

Position view only

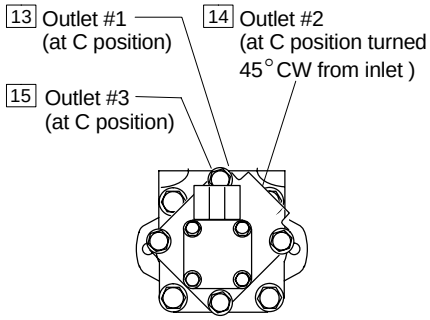

NOTE

V10 cover can be assembled in any of four positions refer to drawing M–2005–S.

13 14 15 Port orientation code
(Viewed from cover end of pump)

Outlet	13 #1	14 #2	15 #3
Opposite inlet	A		A
135° CCW from inlet		A	
90° CCW from inlet	B		B
45° CCW from inlet		B	
Inline with inlet	C		C
45° CW from inlet		C	
90° CW from inlet	D		D
135° CW from inlet		D	

Sharp Edges of Vane Must Lead in Direction of Rotation

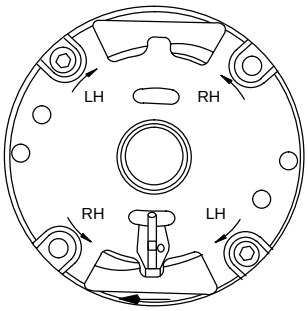

Cover End Cartridge
R. H. Rotation

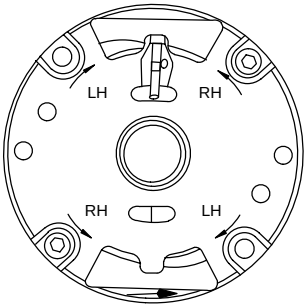

Shaft End Cartridge
R. H. Rotation

NOTE

Standard right hand shaft rotation cartridges shown.
Reverse for left hand rotation.

NOTE

To reverse cartridge kit rotation, remove the two screws and reverse the location of the inlet support plate and the outlet support plate. Reinstall the two screws hand tight. Use pump cover to align all sections of the cartridge. Carefully remove the cover and tighten the screws.

When ordering spare cartridge parts, it is recommended they be obtained in cartridge kits. Kits are assembled and tested for either right or left hand rotation. If left hand rotation is required, it should be specified on parts order by adding suffix ”L” to cartridge kit number.

Printed in U.S.A.