Service Data

Vickers®

Vane Pumps

Vane Type Triple Pump

(F3)–3525VQSV10*–*****–*******–20*

Released 08–01–95

M–2494–S

10 SAE rated capacity (V10 cover end cartridge)

USgpm	○Rotor	○Vane Kit (12 vanes)	○Ring	Pin (V10S)	Pin (V10F/V10P)	Bolt (V10S)	Bolt (V10F)	Bolt (V10P)	○Cartridge Kit
1	317681	923499	317674	2456	2456	11156	295344	295344	923471
2			317675						923470
3			317676						923496
4	351247	923500	317677	16662	16662	1278	432511	432511	923469
5			317678						923468
6	357286	923501	355641	179341	179341	432509	295346	295346	923497
7			331813						923498

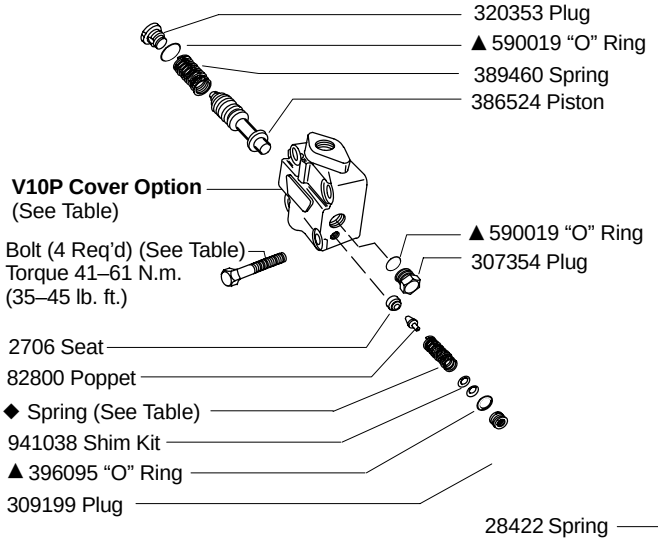

9 V10 port connection

Code	V10S Cover	V10F Cover	V10P Cover
P	372863	379543	———
R	372864	———	———
S	372865	———	———
Y	377829	———	———
T	———	372851	———
K	———	———	388262

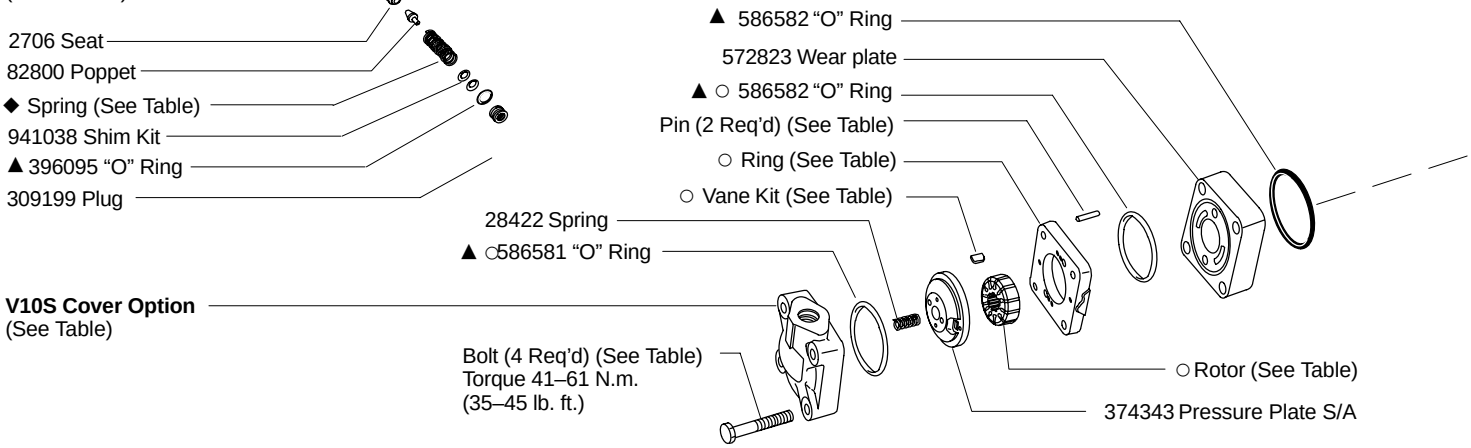

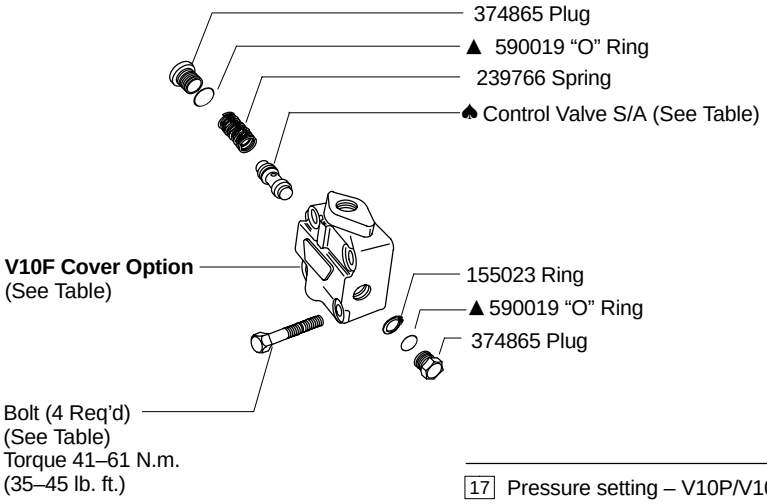

17 Pressure setting – V10P/V10F (Omit for V10S)

Code	Pressure setting V10P/V10F	◆V10P Spring	♠ V10F control valve S/A
A	250 psi	252886	229613
B	500 psi	2280	233018
C	750 psi		232794
D	1000 psi	2282	232795
E	1250 psi		232796
F	1500 psi	2281	232797
G	1750 psi		232798
H	2000 psi		232799
J	2250 psi		233019
K	2500 psi		233020

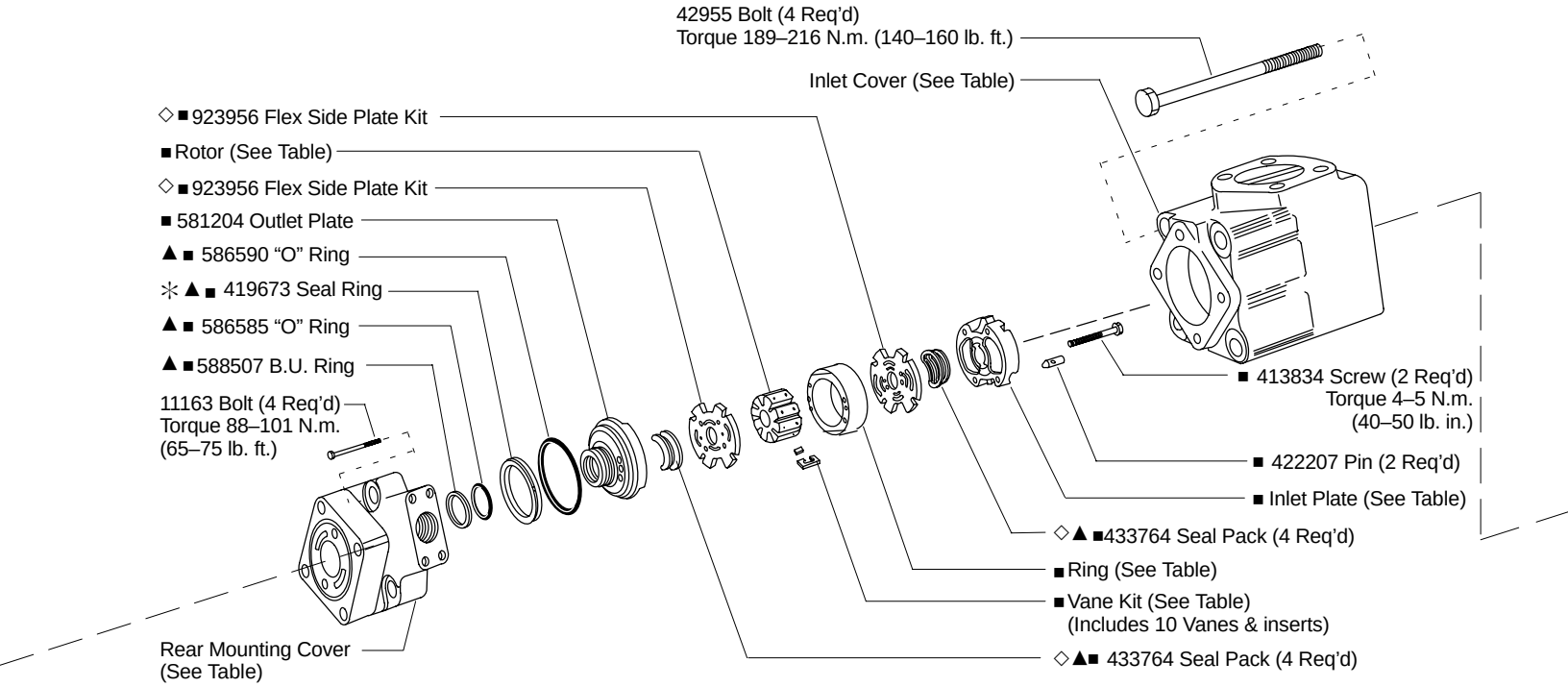

8 SAE rated capacity (**25 VQ center cartridge)

■USgpm	■Ring	■Inlet Plate	■ Rotor	■Vane Kit	■ F3 Cart. Kit
12	326984	419080	270597	922710	581851
14	326985				581852
17	326986				581853
19	326987				581854
21	326988				581855

● Included in 35** VQ shaft end cartridge kit.

■ Included in **25 VQ center cartridge kit.

○ Included in V10 cover end cartridge kit.

▲ Included in seal kit 920170. (Kit contains F3 componemts & both shaft seals.)

◇ Included in flex side plate kit; bronze face of plate must be installed toward the rotor. Kit also contains four seal packs.

□ Assemble seal with spring loaded sealing member towards bearing. Seals to be completely wetted with oil prior to assembly.

✻ Install 419674 & 419673 sealing ring into body, then install cartridge kit.

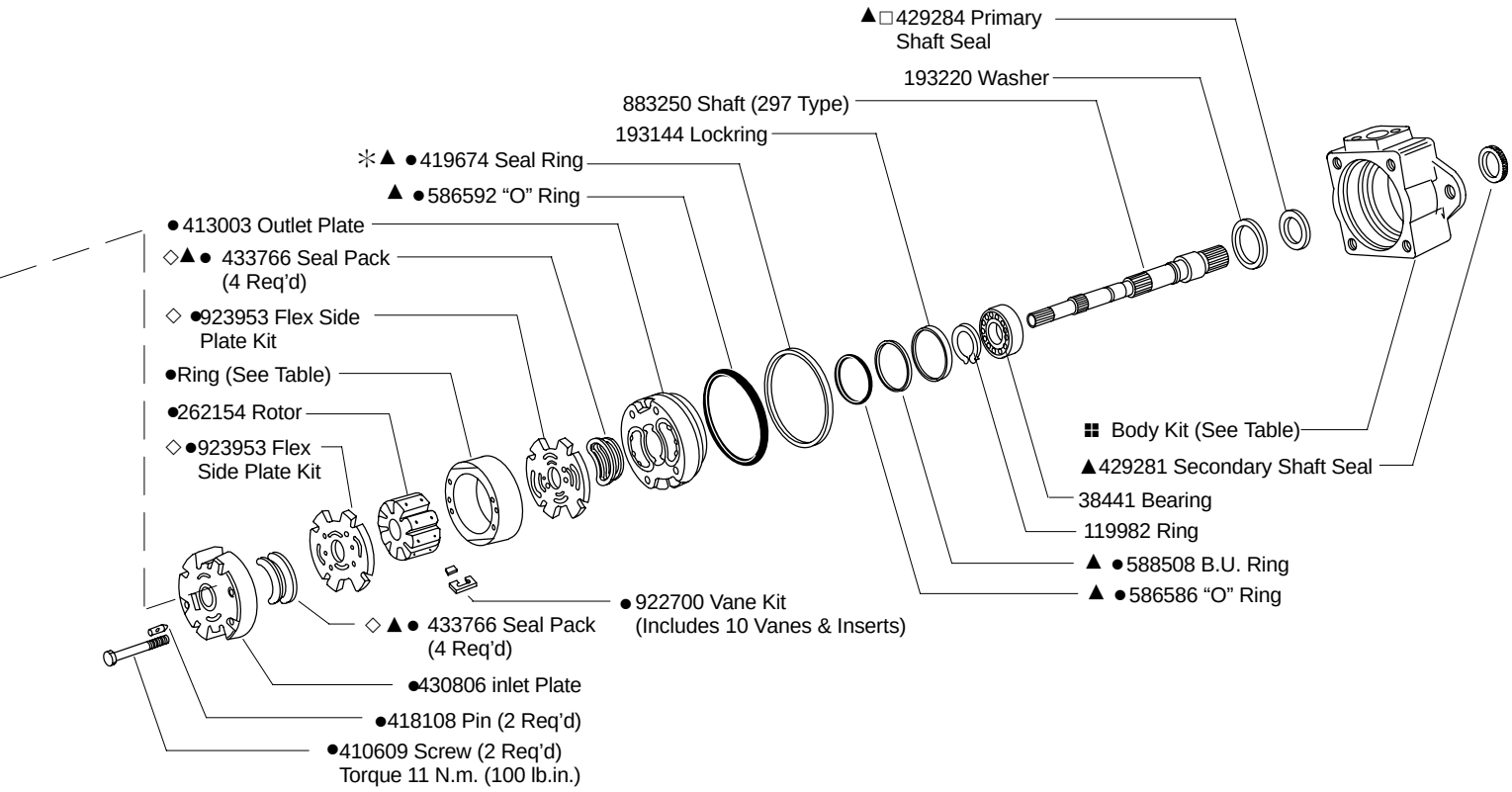

6 SAE rated capacity (35**VQ shaft end cartridge)

●USgpm	●Ring	●F3 Cart. Kit
21	394961	421582
25	319396	421583
30	319397	421584
35	319398	421585
38	319399	421586

7 Port connections

Connection Type	⠿ Body Kit	Inlet Cover	Rear Mounting Cover
A – 4 Bolt Flange (Inch)	02–136919	230189	581863
AM – 4 Bolt Flange (Metric)	02–136920	995239	995240

⠿ NOTE: Body kit includes body, ball, and plug. (Ball and plug not shown)

Model Code

(F3) - 3525VQ S V10 * - * * * * * - * * * * * * * - 20 *

1 2 3 4 5 6 7 8 9 10 11 12 13 14 15 16 17 18 19

1 Special seals

F3 – Vition "O"Rings and shaft seals

2 Pump series designation

35VQ** – Shaft end pump
****25VQ** – Center pump

3 Body mounting flange

S – SAE mounting per J–744 101–2

4 Pump series designation

V10 cover end pump

5 V10 pump cover options

S – Standard cover
F – Flow control and relief cover
P – Priority valve and relief cover

6 SAE rated capacity (VQ shaft – end cartridge)

Code	Code
21 – 21 USgpm	**35** – 35 USgpm
25 – 25 USgpm	**38** – 38 USgpm
30 – 30 USgpm	

7 VQ port connections (inlet & outlet #1 & #2)

A – 4 bolt flange (inch threads)
AM –4 bolt flange (metric threads)

8 Rated capacity (VQ center cartridge)

Code	Code
12 – 12 USgpm	**19** – 19 USgpm
14 – 14 USgpm	**21** – 21 USgpm
17 – 17 USgpm	

9 V10 port connections

V10S standard covers and outlet # 3

Code
S – .750–16 Str. thd.
P – $^1/_2$ " – NPT thd.
Y – .875–14 Str. thd.
R – 1.062–12 Str. thd.

V10F flow/relief control cover

Code	Outlet # 3	Tank port
T –	.750–16 Str. thd	.750–16 Str. thd.
P –	.750–16 Str. thd.	$^1/_2$ " – NPT thd.

V10P priority control covers

Code	Primary port Str. thd	Secondary port Str. thd.	Tank port Str. thd
K –	.5625–18	.750–16	.5625 –18

10 SAE rated capacity (V10 cover end cartridge)

Code	Code
1 – 1 USgpm	**5** – 5 USgpm
2 – 2 USgpm	**6** – 6 USgpm
3 – 3 USgpm	**7** – 7 USgpm
4 – 4 USgpm	

11 Shaft seal

Blank – Single seal
S – Double seal

12 Shaft type

297 – All series

13 Port orientation (Outlet #1)

(Viewed from cover end of pump; refer to table on next page)

14 Port orientation (Outlet #2)

(Viewed from cover end of pump; refer to table on next page)

15 Port orientation (Outlet #3 or primary outlet)

(Viewed from cover end of pump; refer to table on next page)

16 Controlled flow rate, V10F & V10P (Omit for standard cover)

Code	Code
3 – 3 USgpm	**6** – 6 USgpm
4 – 4 USgpm	**7** – 7 USgpm
5 – 5 USgpm	**8** – 8 USgpm

17 Relief valve pressure setting, V10F & V10P (Omit for standard cover)

Code	Code
A – 250 psi	**F** – 1500 psi
B – 500 psi	**G** – 1750 psi
C – 750 psi	**H** – 2000 psi
D – 1000 psi	**J** – 2250 psi
E – 1250 psi	**K** – 2500 psi

18 Design (Subject to change)

19 Rotation (Viewed from shaft end of pump)

L – Left hand for counterclockwise
R – Right hand for clockwise

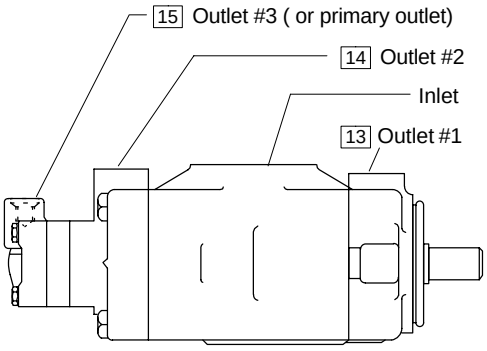

Position view only

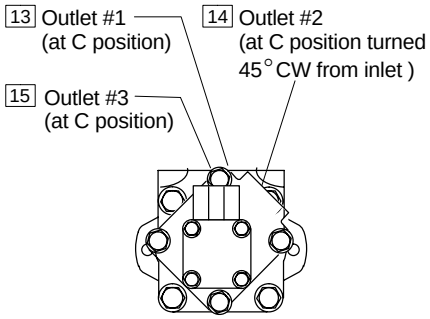

NOTE

V10 cover can be assembled in any of four positions refer to drawing M–2005–S.

13 14 15 Port orientation code
(Viewed from cover end of pump)

Outlet	13 #1	14 #2	15 #3
Opposite inlet	A		A
135° CCW from inlet		A	
90° CCW from inlet	B		B
45° CCW from inlet		B	
Inline with inlet	C		C
45° CW from inlet		C	
90° CW from inlet	D		D
135° CW from inlet		D	

Sharp Edges of Vane Must Lead in Direction of Rotation

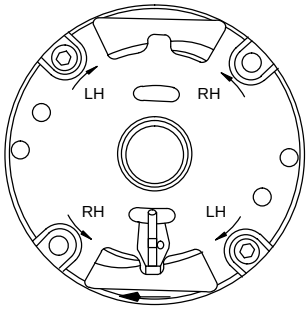

Cover End Cartridge
R. H. Rotation

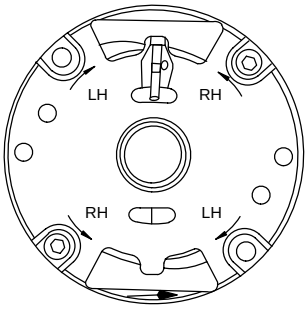

Shaft End Cartridge
R. H. Rotation

NOTE

Standard right hand shaft rotation cartridges shown.
Reverse for left hand rotation.

NOTE

To reverse cartridge kit rotation, remove the two screws and reverse the location of the inlet support plate and the outlet support plate. Reinstall the two screws hand tight. Use pump cover to align all sections of the cartridge. Carefully remove the cover and tighten the screws.

When ordering spare cartridge parts, it is recommended they be obtained in cartridge kits. Kits are assembled and tested for either right or left hand rotation. If left hand rotation is required, it should be specified on parts order by adding suffix ”L” to cartridge kit number.

Printed in U.S.A.