Vickers®

Service Data

Vane Pumps

Vane Type Single Pump

(F3)-V20(*) Series -11, 12 & 22 Designs

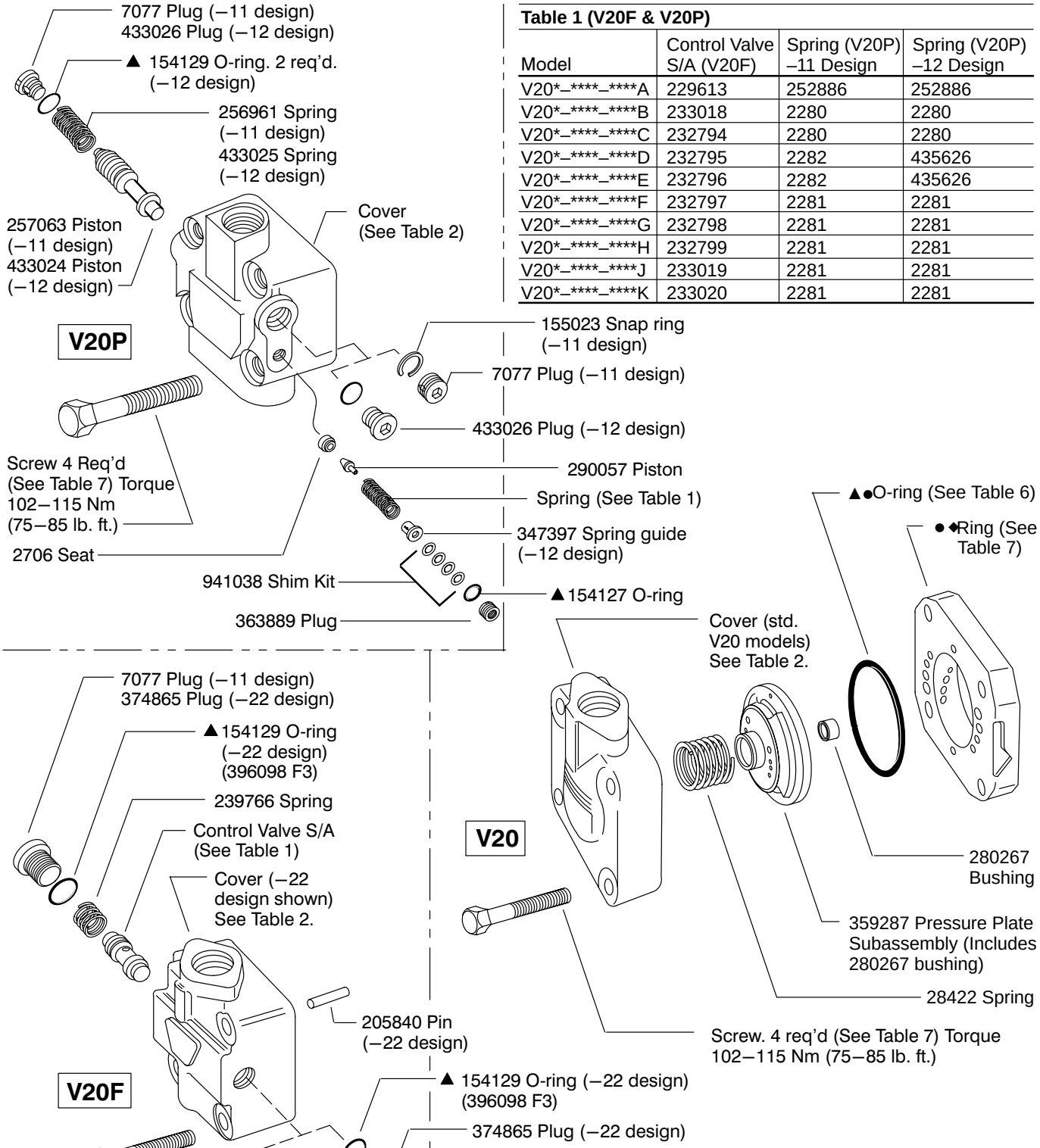

Table 1 (V20F & V20P)

Model	Control Valve S/A (V20F)	Spring (V20P) –11 Design	Spring (V20P) –12 Design
V20*–****–****A	229613	252886	252886
V20*–****–****B	233018	2280	2280
V20*–****–****C	232794	2280	2280
V20*–****–****D	232795	2282	435626
V20*–****–****E	232796	2282	435626
V20*–****–****F	232797	2281	2281
V20*–****–****G	232798	2281	2281
V20*–****–****H	232799	2281	2281
V20*–****–****J	233019	2281	2281
V20*–****–****K	233020	2281	2281

Table 2 (Covers)

Model	–11 Design	–12 Design †	–22 Design †
V20–***F	280690	–	–
V20–***K	375468	–	–
V20–***P	313657	–	–
V20–***R	281145	–	–
V20–***S	293373	–	–
V20–***Y	291045	–	–
V20F–***P–**–2	316090	–	860418
V20F–***S–**–2	306313	–	860441
V20F–***T–**–2	306314	–	860464
V20P–***T–**–2	308121	433030	–

† See Table 3.

© Eaton Hydraulics, Incorporated 2000
All Rights Reserved

Table 3 (V20F & V20P Cover Orifices) ‡

USgpm Thru Cover Orifice	Orifice (Drill) Size V20F (–22 design)	V20P (–12design)
2.5	–	.110” (#35)
3	.120” (#31)	.120” (#31)
4	.136” (#29)	.139”
5	.147” (#26)	.155”
6	.161” (#20)	.170”
7	.173” (#17)	.182”
8	.187”	.196”
9	.199” (#8)	–
10	.213” (#3)	–
11	.221” (#1)	–
12	.250”	.238”″

‡ Use cover (part number shown in Table 2) with 2 USgpm orifice to make cover with larger orifice size.

Table 4 (Shafts)

Model	Shaft	Key	Nut	Shaft Type
V20*–****–1	280372	5881	–	Straight keyed
V20*–****–3	280504	1615	132260	Thd. & Woodruff keyed
V20*–****–6	297330	1609	–	Woodruff-keyed stub
V20*–****–11	280515	–	–	Splined
V20*–****–15	294922	–	–	Splined
V20*–****–38	328096	–	–	Splined
V20*–****–62	582610	–	–	Splined

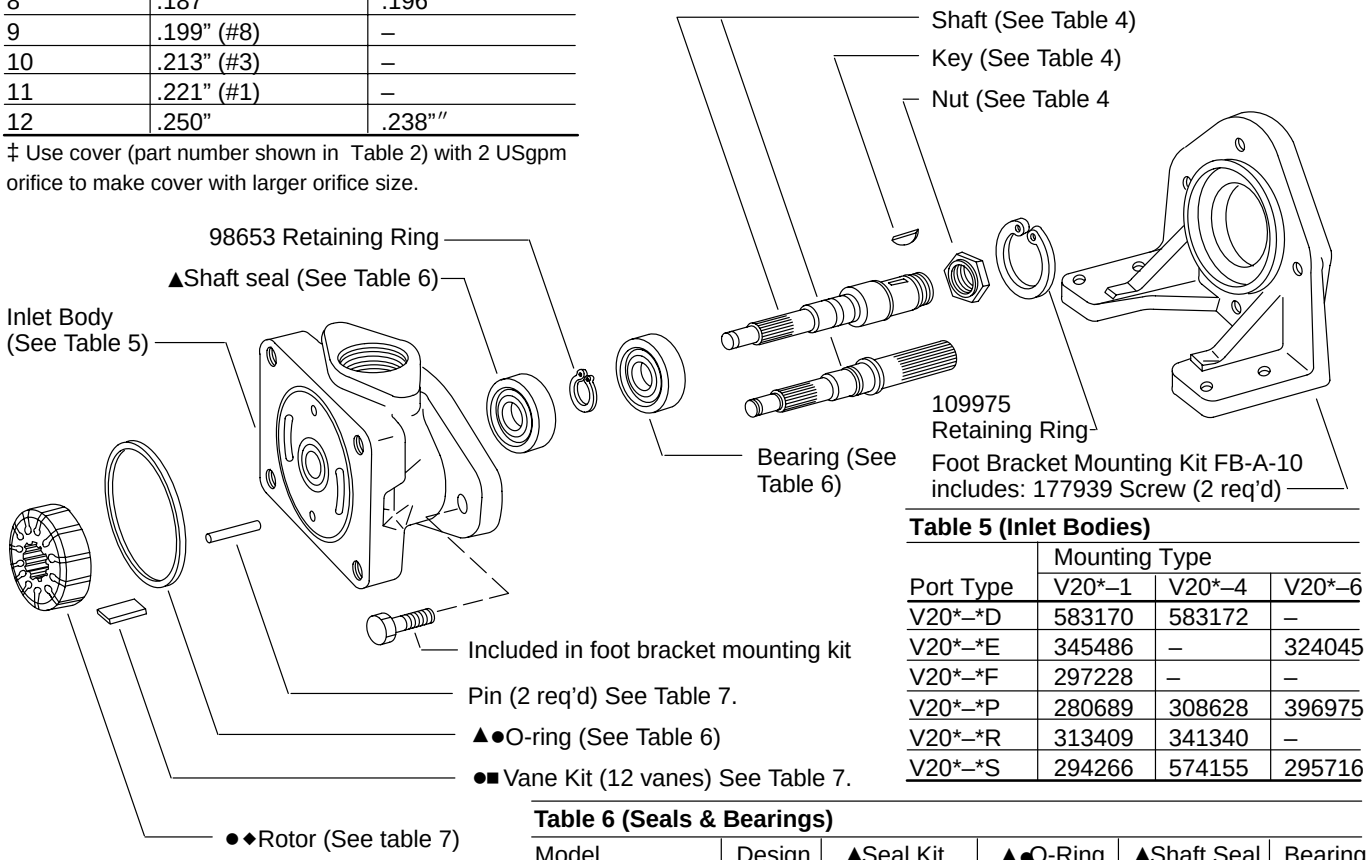

Table 5 (Inlet Bodies)

Port Type	Mounting Type V20*–1	V20*–4	V20*–6
V20*–*D	583170	583172	–
V20*–*E	345486	–	324045
V20*–*F	297228	–	–
V20*–*P	280689	308628	396975
V20*–*R	313409	341340	–
V20*–*S	294266	574155	295716

Table 6 (Seals & Bearings)

Model	Design	▲Seal Kit	▲●O-Ring	▲Shaft Seal	Bearing
V20	–11	922733	154090	229235	98574
F3–V20	–11	919805	586589	279499	98574
V20F	–11	922733	154090	229235	98574
F3–V20F	–11	919805	586589	279499	98574
V20F	–22	02–137555	154090	229235	98574
F3–V20F	–22	02–137556	586589	279499	98574
V20F–****–S	–22	02–137557	154090	02–133102	1704
F3–V20F–****–S	–22	02–137558	586589	02–133102	1704
V20P	–11	922733	154090	229235	98574
F3–V20P	–11	919805	586589	279499	98574
V20P	–12	922733	154090	229235	98574
F3–V20P	–12	919805	586589	279499	98574

▲Included in seal kit (See Table 6)
●Included in cartridge kit (See Table 7)
■ Vane kit (includes 12 vanes) See Table 7.
◆For best performance, use complete cartridge kit (Table 7) for repair.

Table 7

Model	●◆ Ring	●◆ Rotor	●■ Vane Kit	● Cartridge Kit, Std.	● Cartridge Kit, F3	Pin	Screw (V20)	Screw (V20F & V20P)
V20*–**5	388284	502255	923485	02–137559	02–137570	2161	131485	11165
V20*–**6	328150	502255	923485	02–137560	02–137571	2161	131485	11165
V20*–**7	328152	502256	923493	02–137561	02–137572	2478	131486	9431
V20*–**8	331791	502256	923493	02–137562	02–137573	2478	131486	9431
V20*–**9	331789	502256	923493	02–137563	02–137574	2478	131486	9431
V20*–**10	374309	502257	923478	02–137564	02–137575	16662	131486	96168
V20*–**11	328156	502257	923478	02–137565	02–137576	16662	131486	96168
V20*–**12	331806	502258	923479	02–137566	02–137577	9603	1319	96168
V20*–**13	331807	502258	923479	02–137567	02–137578	9603	1319	96168

Model Code

(F3) – V 20 (*) – * * * * – (S) * * (*) (*) – ** – (L)

1 2 3 4 5 6 7 8 9 10 11 12 13 14 15

1 Special seals

F3 – For mineral oil & fire resistant fluids (Omit if not required)

2 Vane pump

3 Series designation

4 Cover type

F – Flow control cover
P – Priority valve cover
Omit – Standard cover

5 Mounting

1 – Flange, 2 bolt SAE A size
2 – Foot bracket at 12 o'clock, viewed from shaft end (11 & 12 designs only)
3 – Power takeoff (11 & 12 designs only)
4 – Face type
6 – Flange, 2 bolt SAE B size
23 – Foot bracket at 3 o'clock (11 & 12 designs only)
26 – Foot bracket at 6 o'clock (11 & 12 designs only)
29 – Foot bracket at 9 o'clock (11 & 12 designs only)

6 Inlet port connection

D – 1.312-12 UN-2B thread (22 design only)
E – 1.5 inch dia. 2-bolt flange
F – 1.156 inch dia. 2-bolt flange
P – 1-1/4" NPTF
R – 1" NPTF
S – 1.625-12 UN-2B thread

7 Ring capacity

(Rated capacity (USgpm) at 1200 rpm, 6.9 bar (100 psi)

5 – 5 USgpm (22 design only)
6 – 6 USgpm
7 – 7 USgpm
8 – 8 USgpm
9 – 9 USgpm
10 – 10 USgpm
11 – 11 USgpm
12 – 12 USgpm
13 – 13 Usgpm

8 Outlet port connection(s)

Code	Std. cover	Flow control cover	
		Pressure	Tank
F	.687 dia. (11 & 12 designs only).	———	———
P	3/4 NPT Thd. (11 & 12 designs only)	.750–16 St.Thd.	1/2 NPT Thd.
S	1.062–12 St.Thd. (11 & 12 designs only)	.750–16 St.Thd.	1.062–12 St.Thd.
T	———	.750–16 St.Thd.	.750–16 St.Thd.

Priority valve cover (11 & 12 designs only)

Code	Primary outlet	Secondary outlet	Tank
T	.750–16 St.Thd.	.750–14 St.Thd.	.750–16 St.Thd.

9 Shaft seal type

S – Double lip seal and open bearings (22 design only)
Omit – Single lip seal and sealed bearings

10 Shaft type

1 – Straight, keyed
3 – Threaded
6 – Straight stub, keyed
11 – Splined
15 – Splined
38 – Splined
62 – Splined

11 Outlet or primary outlet port positions

(Viewed from cover end of pump)

A – Opposite inlet
B – 90° CCW from inlet
C – In line with inlet
D – 90° CW from inlet

12 Flow rate (V20F & V20P)

(Through orifice in cover)

2 – 2 USgpm
2.5 – 2.5 USgpm (11 & 12 designs only)
3 – 3 USgpm
4 – 4 USgpm
5 – 5 USgpm (22 design only)
6 – 6 USgpm
7 – 7 USgpm
8 – 8 USgpm
9 – 9 USgpm (22 design only)
10 – 10 USgpm (22 design only)
11 – 11 USgpm (22 design only)
12 – 12 USgpm (22 design only)

13 Pressure setting (V20F & V20P)

A – 250 psi
B – 500 psi
C – 750 psi
D – 1000 psi
E – 1250 psi
F – 1500 psi
G – 1750 psi
H – 2000 psi
J – 2250 psi
K – 2500 psi

14 Design

11 – V20, V20F & V20P
12 – V20P
22 – V20F

15 Rotation

(Viewed from shaft end of pump)

L – Left hand (counterclockwise)
Omit – Right hand (clockwise)

Printed in U.S.A.