EATON | Char-Lynn

Series 10 Steering Control Unit

Parts and Repair Information

Design -002

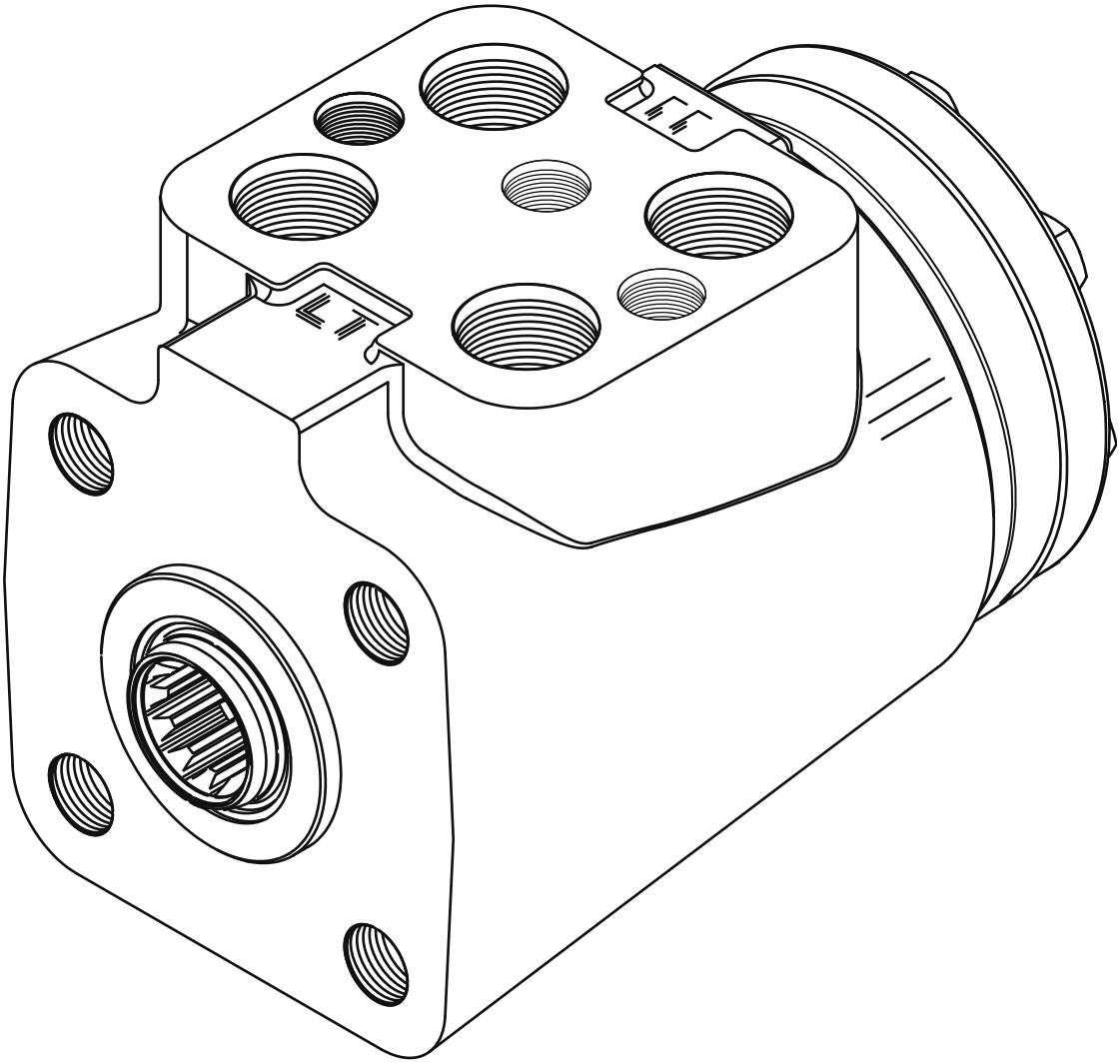

Series 10
Steering Control Unit

Table of Contents

Introduction
ID Tag 2
Tools 3
Parts
Assembly Drawing 4
List 5
Disassembly 6-8
Assembly 9-16
Seal Installation 9-10

Introduction

This manual provides service information for Char-Lynn® Series 10 Steering Control Units. Step by step instructions for complete disassembly, inspection and reassembly of the control unit are given.

The following recommendations should be followed to insure successful repairs.

- Most repairs require the removal of the control unit from the vehicle.
- Cleanliness is extremely important.
- Clean the port areas thoroughly before disconnecting the hydraulic lines.
- Plug the control unit ports and cover open hydraulic lines immediately after they have been disconnected.
- Drain the oil and clean the exterior of the control unit before making repairs.
- Wash all metal parts in clean solvent.
- Use filtered, moisture-free compressed air to dry the parts.
  Do not wipe them dry with paper towels or cloth – lint in a hydraulic system will cause damage.
- Always use new seals when reassembling hydraulic control units.
- Lubricate new rubber seals with a petroleum jelly before installation.
- Torque all bolts over gasketed joints, then repeat the torquing sequence to make up for gasket compression.

After all repairs are complete it is essential to verify the accuracy of control unit repairs on an authorized test stand.

ID Tag
Ordering Parts

How to Order Replacement Parts

Each order must include the following:

1. Product Number
2. Date Code
3. Part Name
4. Part Number
5. Quantity of Parts

Refer to specific part listings for your Char-Lynn® Steering Control Unit when ordering replacement parts. Listings are available from Eaton. Sample tag shows identification.

When ordering replacement parts, you must include the following information:

For additional literature contact Eaton Hydraulics at

14615 Lone Oak Road,
Eden Prairie, MN 55344

http://hydraulics.eaton.com

Bar Code Label — Launch Date June, 1999

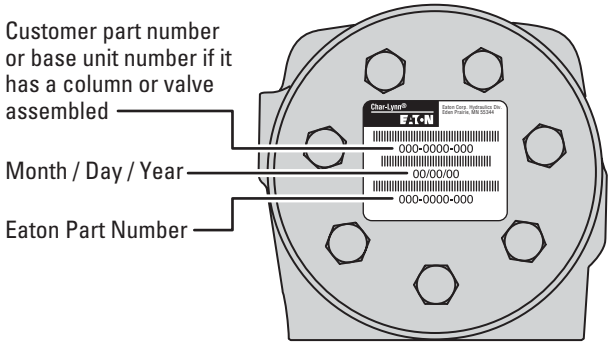

Port Face

Tools

Tools Required For Disassembly and Assembly

- Screwdriver (102-152 mm [4 in. - 6 in.] long, x 3 mm [118 in.] wide flat blade).
- 1/2 inch socket for current hex head cap screws.
- Breaker bar wrench.
- Torque wrench (30 Nm [300 lb-in] capacity).

Special Tools:

- Plunger and Sleeve Tool No. 600792-001*

*Tools available—by special order—through our service department.

Parts

Assembly Drawing

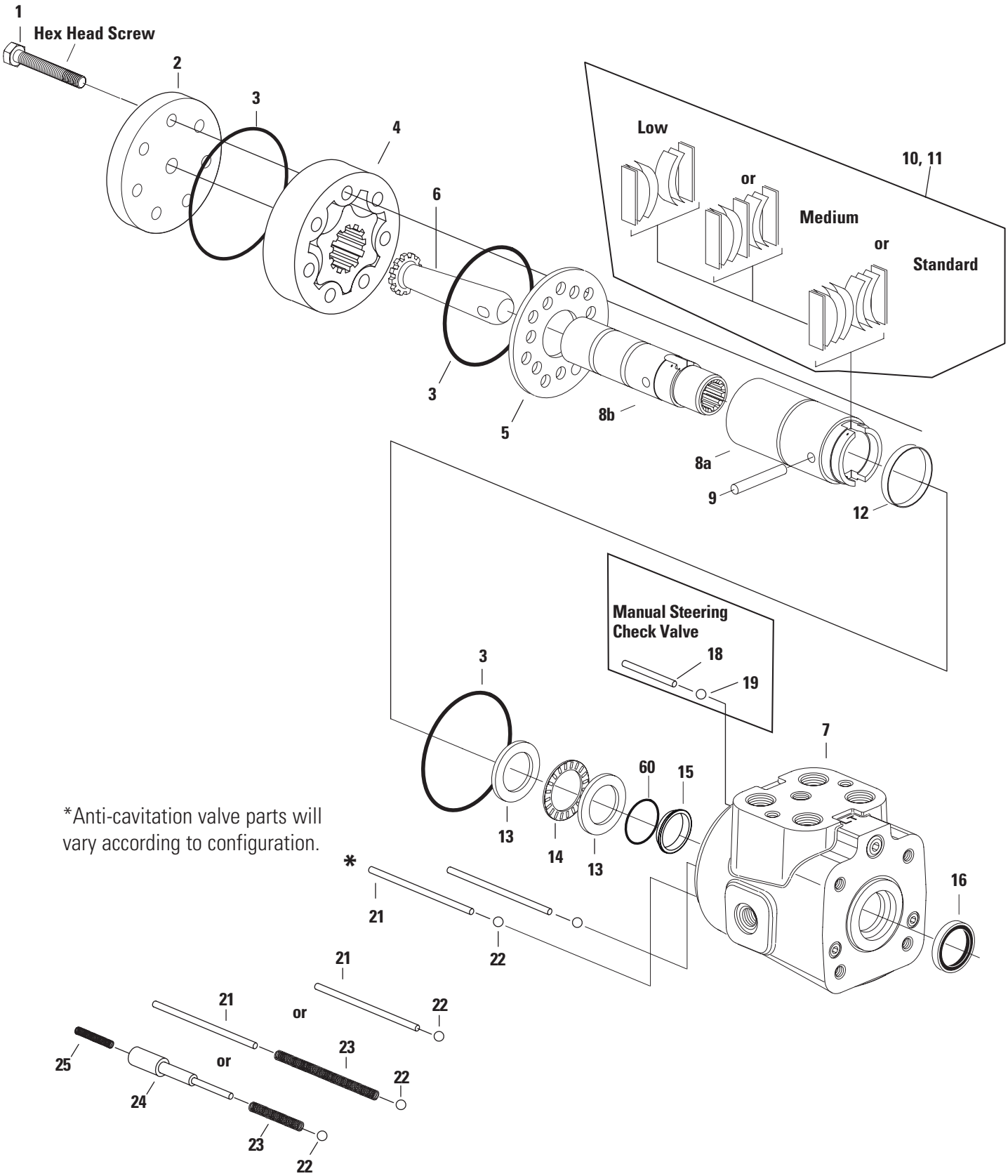

*Anti-cavitation valve parts will vary according to configuration.

Parts

Table 1.0 Parts List

Series 10

Steering Control Unit

ITEM NO.	PART NO.	QTY.	DESCRIPTION	REFERENCE PAGE
1	See Table 1.0	7	Cap Screw, Hex Head	6
2	23901-000	1	Cap, End	
3	5776-000	3	Seal, 72,6 mm [2.86 in.] ID	
4	See Table 1.0	1	Gerotor, Sub-assembly	6
5	113094-000	1	Plate, Spacer	
6	112238-000	1	Drive	
7	204107-XXX	1	Housing, Valve	
8a		1	Control Sleeve	
8b		1	Control Spool	
9	15-000	1	Pin, Centering	
10	112714-000	2 or 3	Spring, Spacer	
11	113599-000	4 or 6	Spring, Centering	
12	112737-000	1	Retainer Spring	
13	14880-000	2	Bearing Race	
14	5544-000	1	Bearing, Needle Thrust	
15	9332-000	1	Seal – 24,9 mm [.98 in.] ID	
16	844-000	1	Dust Seal	
18	16026-422P	1	Pin, Roll– 34,92 mm [1.375 in.] Length	
19	285020-080	1	Ball – 6,35 mm [.25 in.] OD	
21	16026-436	2	Pin, Roll – 40,00 mm [1.575 in.] Length	
22	18015-000	2	Ball, Check – 6,35 mm [.250 in.] OD	
23	230400-000 or 4999516-000	2 2	Compression Spring Compression Spring (See main parts assembly drawing)	
24	113598-000	2	Anti-cav plug retainer	
25	230313-000	2	Compression Spring	
60	4999651-001	1	O-ring	

Parts

Gerotor

Table 2.0

ACTUAL DISPL. cm^3/r [in^3/r]	REF. NO. 4 GEROTOR PART NO.	Width mm[in]	REF. NO. 29 CAP SCREW PART NO.	LENGTH mm[in]
60 [3.6]	8618-023	10,2 [.40]	16336-514	38,1 [1.50]
75 [4.5]	8618-024	10,2 [.40]	16336-514	38,1 [1.50]
95 [5.9]	8618-003	13,2 [.52]	16336-515	41,3 [1.62]
120 [7.3]	8618-009	16,5 [.65]	16336-516	44,5 [1.75]
145 [8.9]	8618-020	20,1 [.79]	16336-517	47,6 [1.87]
160 [9.7]	8618-004	21,9 [.86]	16336-520	50,8 [2.00]
185 [11.3]	8618-005	25,4 [1.00]	16336-521	54,0 [2.12]
230 [14.1]	8618-031	31,7 [1.25]	16336-523	60,3 [2.37]
295 [17.9]	8618-035	40,4 [1.59]	16336-525	66,7 [2.62]
370 [22.6]	8618-032	50,8 [2.00]	16336-531	79,4 [3.12]
460 [28.2]	8618-033	63,5 [2.50]	16336-535	92,0 [3.62]
590 [35.9]	8618-036	80,8 [3.18]	16336-542	108,0 [4.25]
740 [45.1]	8618-034	101,6[4.00]	16336-551	130,2 [5.12]

Disassembly

Cleanliness is extremely important when repairing a steering control unit. Work in a clean area. Before disconnecting lines, clean port area of unit thoroughly. Use a wire brush to remove foreign material and debris from around exterior joints of the unit.

We recommend that you keep the unit in a vise during disassembly. Follow the clamping procedures explained throughout the manual.

1. Clamp unit in vise, meter end up. Clamp lightly on edges of port face sides (see figure1). Use protective material on vise jaws. Housing distortion could result if jaws are overtightened.

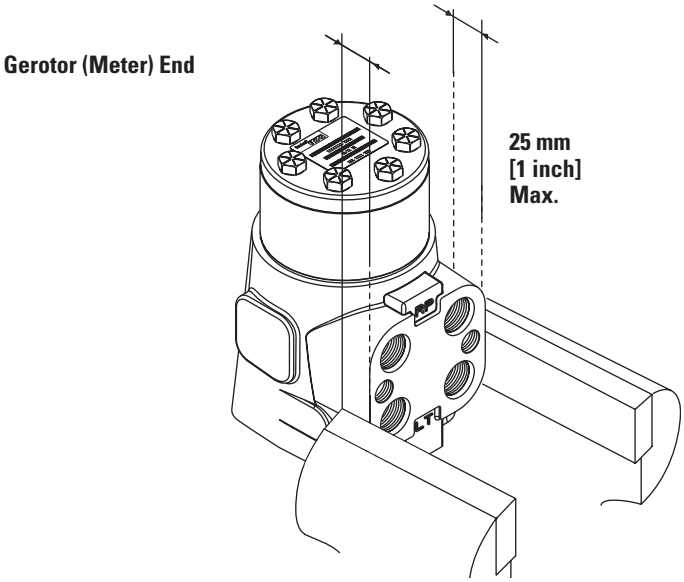

Figure 1

Disassembly

2. Remove 5/16 in. cap screws.
3. Remove end cap.
4. Remove seal from gerotor (meter).

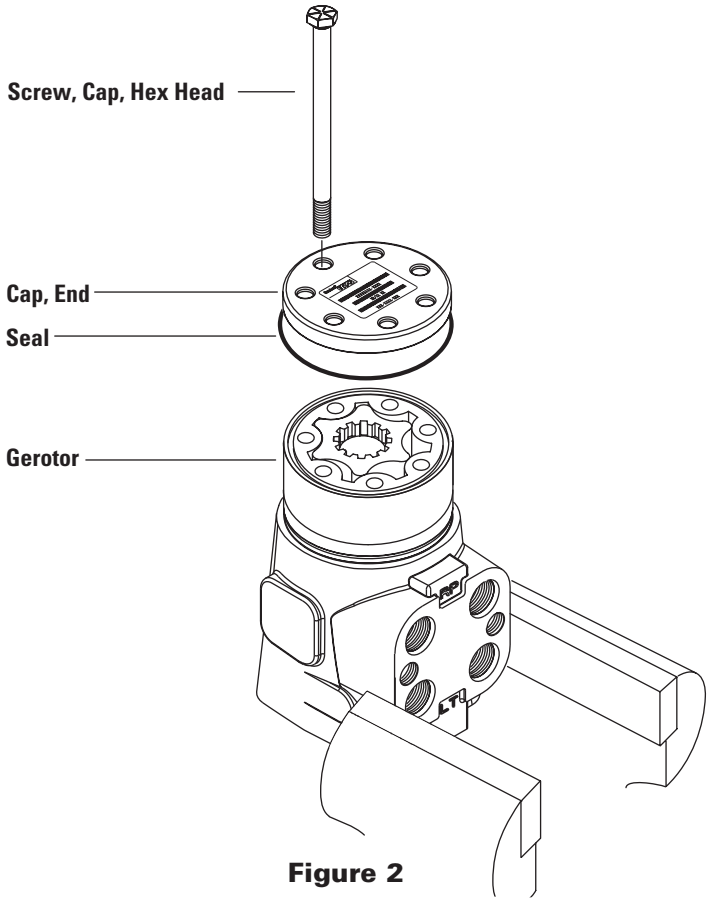

Figure 2

5. Remove gerotor (meter). Be careful not to drop star.
6. Remove seal from spacer plate.
7. Remove spacer plate.
8. Remove seal from housing.
9. Pull drive and twist to remove SP/SL drive assembly from housing.
10. Remove housing from vise.

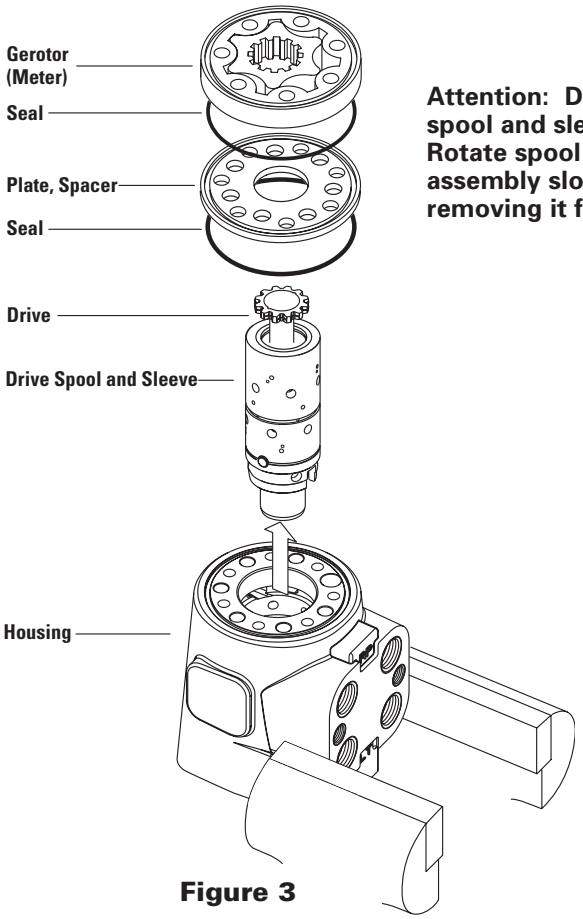

Attention: Do not bind spool and sleeve in housing. Rotate spool and sleeve assembly slowly when removing it from housing.

Figure 3

Disassembly

11. Carefully remove bearing and races, anti-cavitation valves and manual steering check valve (roll pin and ball) from bolt holes by tipping housing Gerotor side down. (see figure 3).
12. Do not remove any valves other than manual steering check valve assembly and anti-cavitation valve assembly. All other valves are factory preset and are non-serviceable.
13. Carefully Remove Seal with a thin-blade screw driver. Do not scratch seal groove with screw driver.
14. Use thin bladed screw driver to pry dust seal from housing. Do not damage housing.

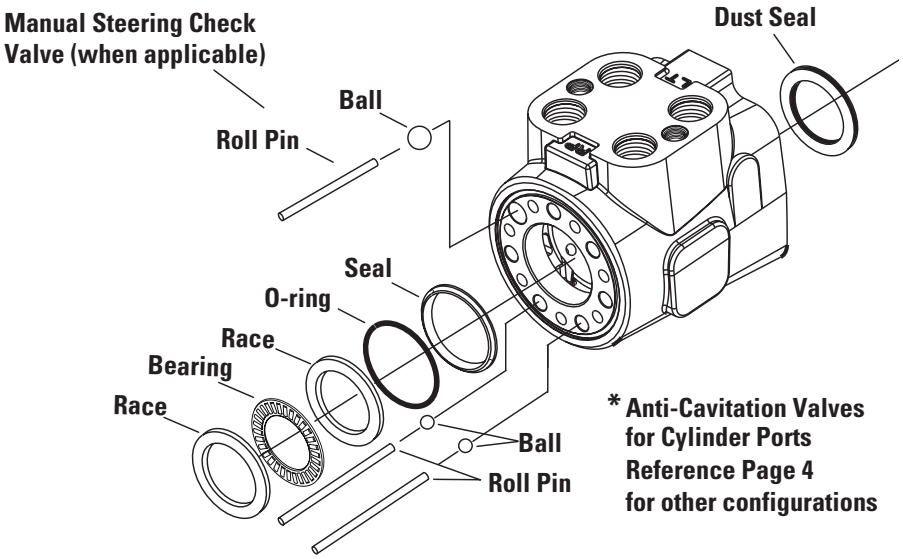

Figure 4

15. Push pin from spool and sleeve assembly.
16. Remove Drive
17. Push spool partially from control end of sleeve, then carefully remove centering springs and retaining ring from spool by hand (figure 8).

***Note**

Standard input torque unit uses six centering springs and two spacers.

Medium input torque unit uses four centering springs and three spacers.

Low input torque unit uses four centering springs and two spacers.

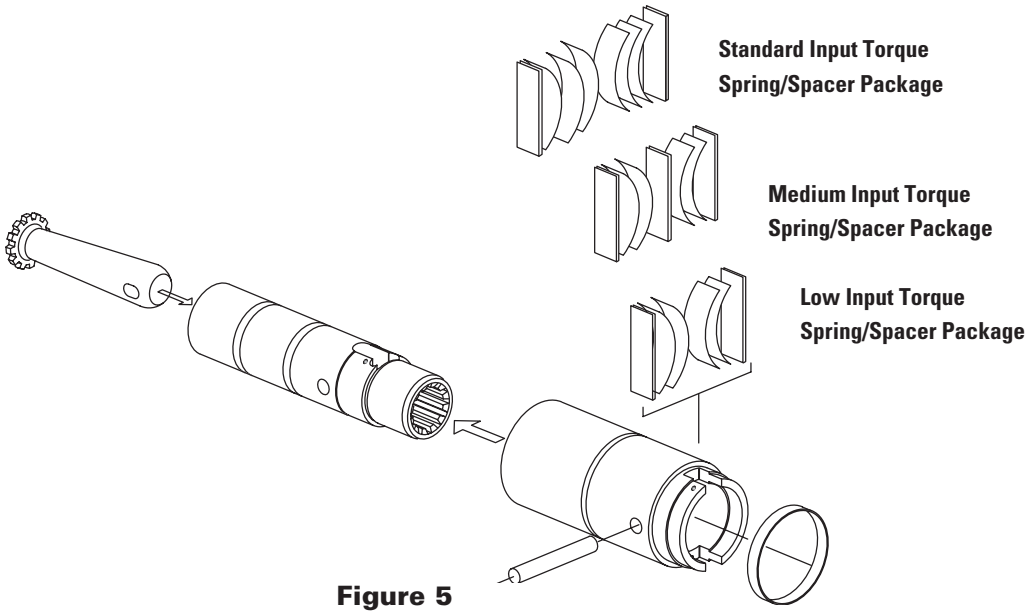

Figure 5

Assembly

Assembly Cleanliness

Recommendations

Check all mating surfaces. Replace any parts that have scratches or burrs that could cause leakage. Clean all metal parts in clean solvent. Blow dry with air. Do not wipe dry with cloth or paper towel because lint or other matter can get into the hydraulic system and cause damage. Do not use grit paper or file or grind these parts.

Note: Lubricate all seals with clean petroleum jelly. A good service policy is to replace all old seals with new seals. Do not use excessive lubricant on seals for meter section.

Refer to parts lists covering your steering control unit when ordering replacement parts.

Place housing on a flat work area on a clean lint free cloth. Install press-fit 24,9 mm[.98 in.] ID seal in housing with metal suface of seal facing toward housing (figure 6).

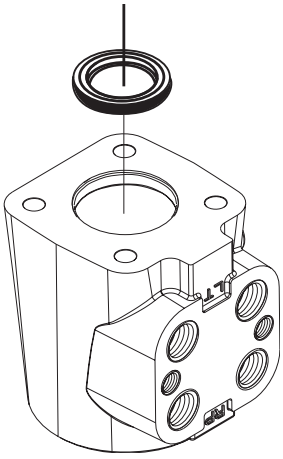

Figure 6

2-Piece Shaft Seal Installation

For installation of o-ring: 4999651-001

and

Seal 9332-000

1. Place housing on a flat work area as shown in figure 7.
2. Lubricate seal and o-ring with hydraulic oil before installation
3. Align sleeve with housing bore (figure 7)

Figure 7

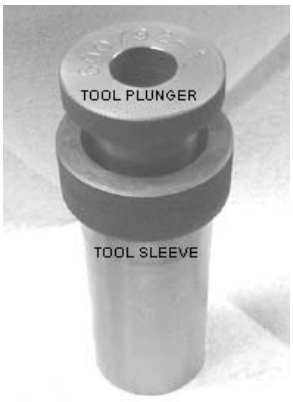

Tool No. 600792-001

Assembly

2-Piece Shaft Seal Installation

4. Insert sleeve into housing bore (Figure 8)

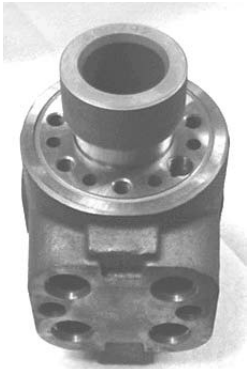

Figure 8

5. Place o-ring on plunger (Figure 9).

Figure 9

6. Align seal with plunger. cross section "L" shape of seal should be upside down (figure 10).

Figure 10

7. Push seal onto plunger. Lip of seal should be between o-ring and plunger. No gap should exist between o-ring and seal (figure 11).

Figure 11

8. Align plunger with sleeve (figure 12).

Figure 12

. Push plunger into sleeve until it bottoms out, rotate 1/4 turn (figure 13).

10. While holding sleeve in housing, withdraw plunger.

11. Withdraw sleeve.

Figure 13

12. Inspect seal installation. Seal and o-ring must both be within shaft seal counterbore of housing (figure 14).

Figure 14

13. Clamp housing in Vice (figure 15).

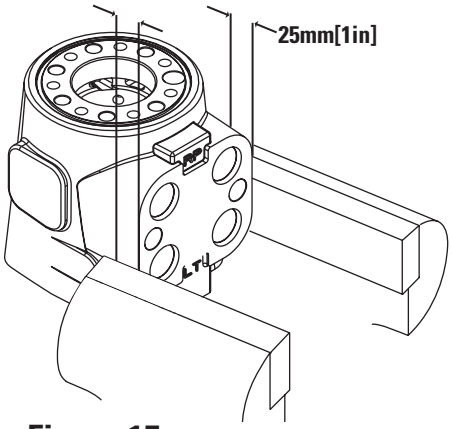

Figure 15

14. Install two bearing races and Thrust bearing as shown in figure 16.

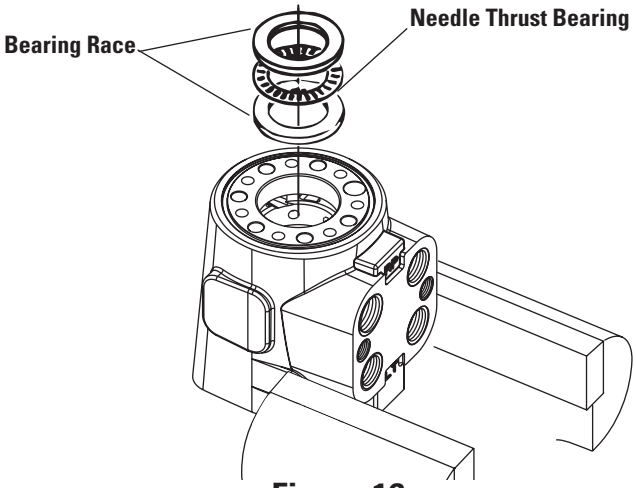

Figure 16

15. Assemble spool and sleeve carefully so that spring slots line up at the same end. Rotate spool while sliding parts together. Test for free rotation. Spool should rotate smoothly in sleeve with fingertip force applied at splined end. Align spring slots and identification marks (Figure 17) in spool and sleeve and stand parts on end of bench.

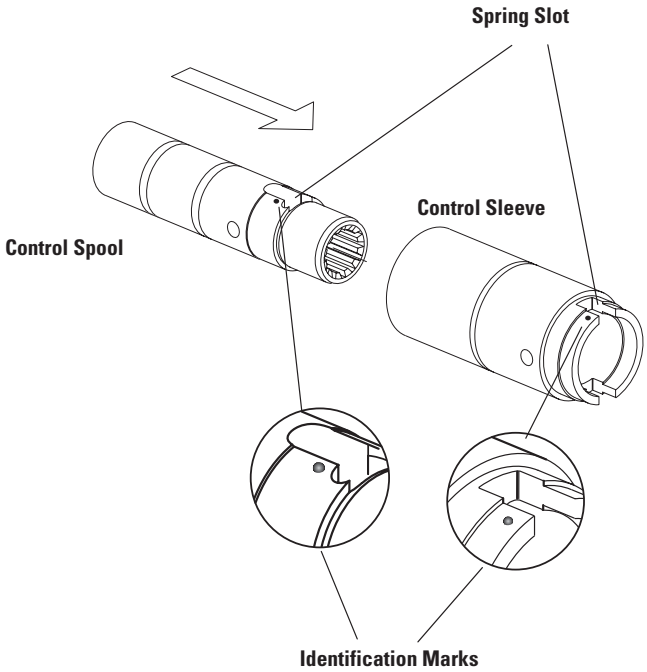

Figure 17

16. Installation of spring spacers and springs, hold spring retainer at an angle as shown (see figure 18 reference number 1), insert spring spacers and springs one at a time in sequence noted by reference numbers 2 - 9 (standard torque), 2 - 8 (medium torque), 2- 7 (low torque), then position spring retainer correctly over all these parts. Adjust alignment of spring parts with a small screwdriver.

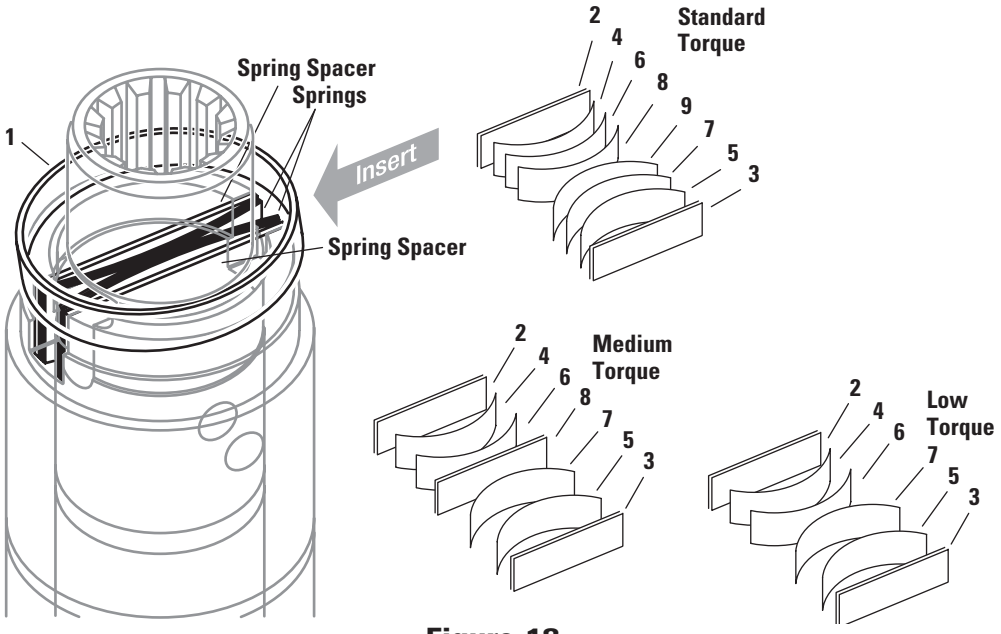

Figure 18

17. Assemble drive and spool/sleeve.

18. Insert pin through spool and sleeve assembly through hole in drive, until pin is flush at both sides of sleeve.

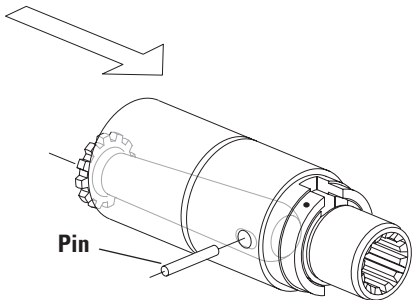

Figure 19

19. Position spool and sleeve assembly so that splined end of spool enters 14 hole end of housing first (figure 20).

Attention: While inserting spool and sleeve assembly into housing, make sure parts do not tilt out of position. Push assembly gently into place with slight rotating action. Bring spool assembly entirely within housing bore until parts are flush at 14 hole end of housing. With spool assembly in this flush position, check for free rotation within housing by turning assembly with fingertip force at splined end.

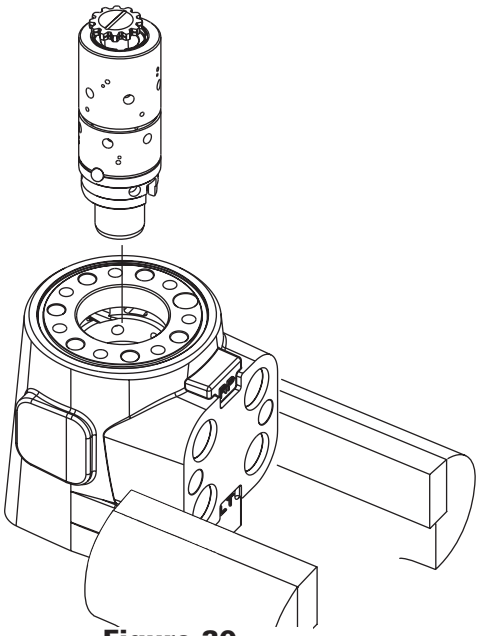

Figure 20

20. Install 72,6 mm [2.86 in.] ID O-ring in housing (figure 20).
21. Install anti-cavitation valves and manual steering check valve (if used) in holes, as shown in figure 20. After installing balls, inspect holes to make sure they are properly seated.

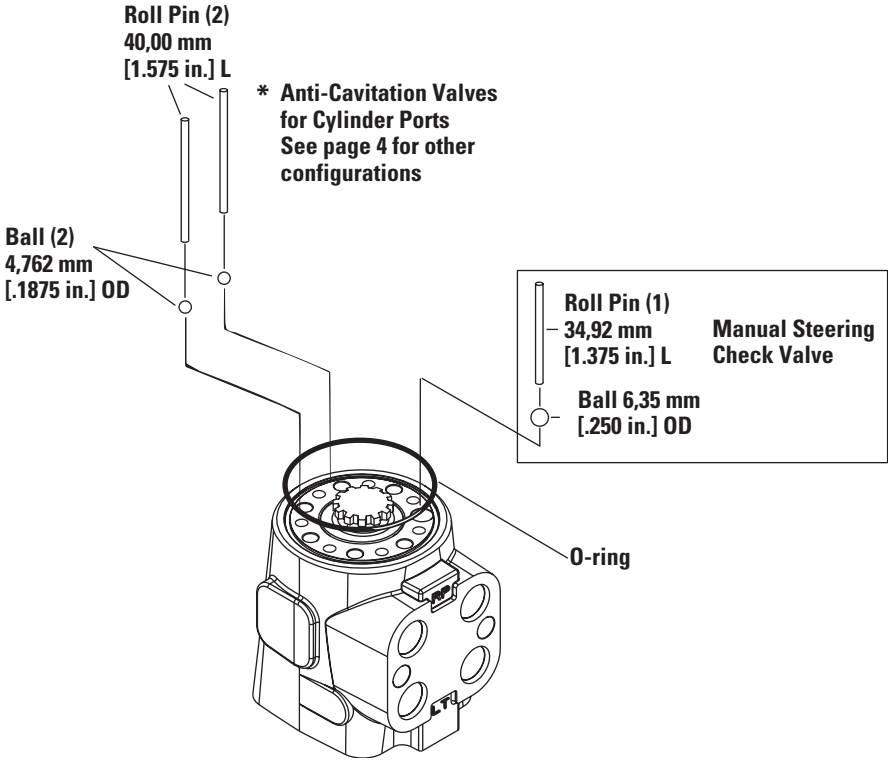

Figure 20

Timing Reference Data — Align star valleys (reference A) with marked drive 1 and drive 2 (reference B). Valleys must align with pin. Note parallel relationship of reference lines A, B, C, and D in figure 21. Align bolt holes without disengaging gerotor (meter) from drive.

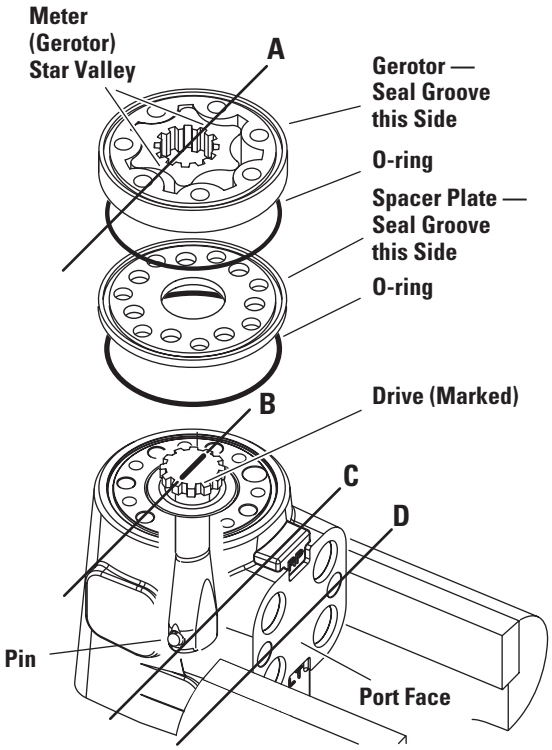

Figure 21

22. Install spacer plate. Align bolt holes in spacer plate with tapped holes in housing.
23. Lubricate and install 72,6 mm [2.86 in.] ID seal in spacer plate.
24. Install gerotor (meter) seal groove up, note position of star valleys in relation to marked drive.
25. Lubricate and install 72,6 mm [2.86 in.] ID seal in gerotor ring.
26. Lubricate and install 72,6 mm [2.86 in.] ID seal in gerotor (meter).
27. Install end cap on gerotor, aligning holes.

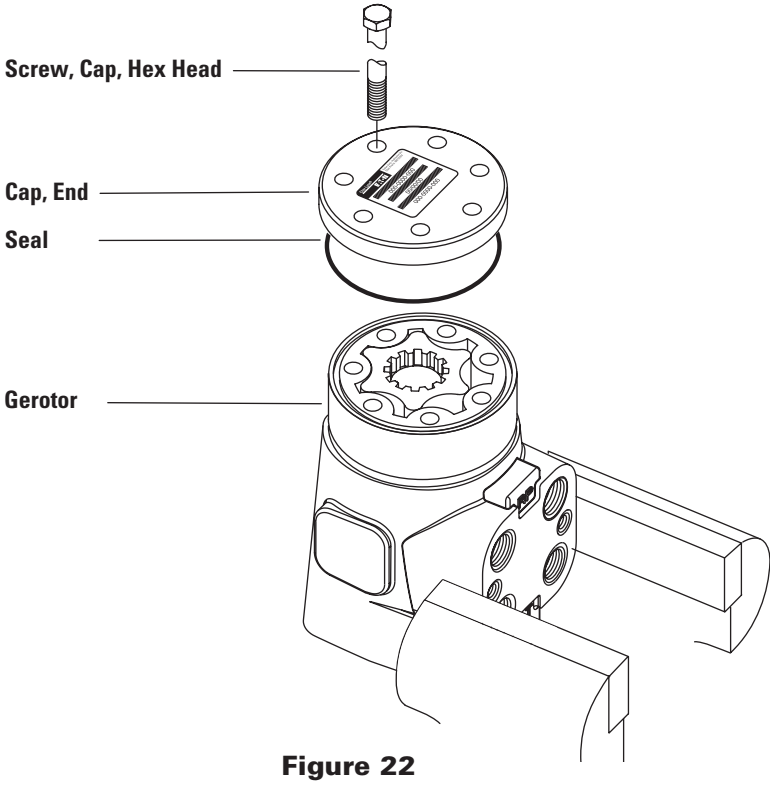

Figure 22

Note: Check to insure that spool and sleeve are flush or slightly below 14 hole surface of housing.

Attention: Clean upper surface of housing by wiping with palm of clean hand. Clean each of the flat surfaces of meter section parts in a similar way just before reassembly. Do not use cloth or paper to clean surfaces.

28. Install 7 dry cap screws in end cap. Pretighten cap screws to 17Nm [150 lb-in], then torque screws to 28-34 Nm [250-300 lb-in] in sequence shown in figure 24.

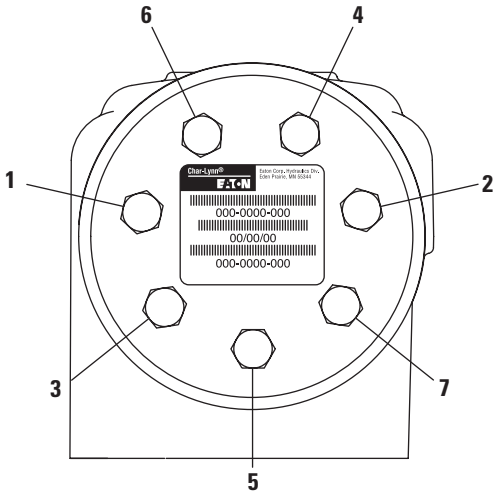

Figure 23

Eaton
14615 Lone Oak Road
Eden Prairie, MN 55344
USA
Tel: 952 937-9800
Fax: 952 974-7722
www.hydraulics.eaton.com

Eaton
20 Rosamond Road
Footscray
Victoria 3011
Australia
Tel: (61) 3 9319 8222
Fax: (61) 3 9318 5714

Eaton
Dr.-Reckeweg-Str. 1
D-76532 Baden-Baden
Germany
Tel: (49) 7221 682-0
Fax: (49) 7221 682-788

EATON | Char-Lynn

© 2004 Eaton Corporation
All Rights Reserved
Printed in USA
Document No. C-STCU-TS005-E
October 2004