Char-Lynn®
Power Steering

Parts Information

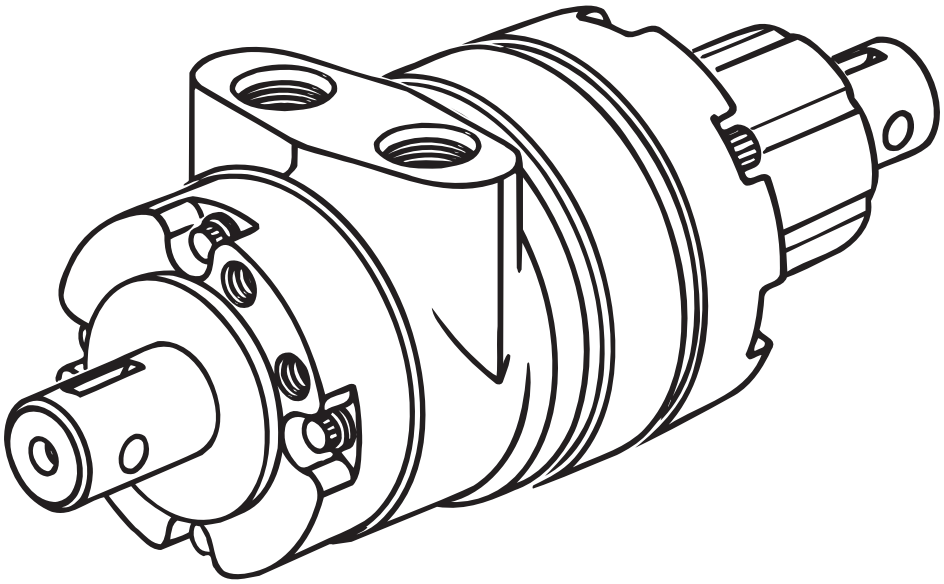

Torque Generator **207-XXXX-001 and -006**

Torque Generator

Displacement cu. cm./rev. [cu. in./rev.]	Item No. 9 Control End Drive (1)	Item No. 11 Gerotor Assembly (1)	Item No. 12 Power End Drive (1)	Item No. 15 Power End Cap Screws (7)
101 [6.2]	147	N/A	148	21045-5 †
167 [10.2]	44	N/A	45	21045-6 †
59 [3.6]	147	8980-023	22948	5389-010 ††
76 [4.7]	147	8980-031	148	5389-015 ††
96 [5.9]	147	8980-003	148	5389-015 ††
126 [7.7]	44	8980-032	45	5389-018 ††
160 [9.7]	44	8980-004	45	5389-018 ††

N/A Not Available (These Items No Longer Available from Eaton)
† Cap Screw (1/4-20 NC)
†† Cap Screw (5/16-24 NF)

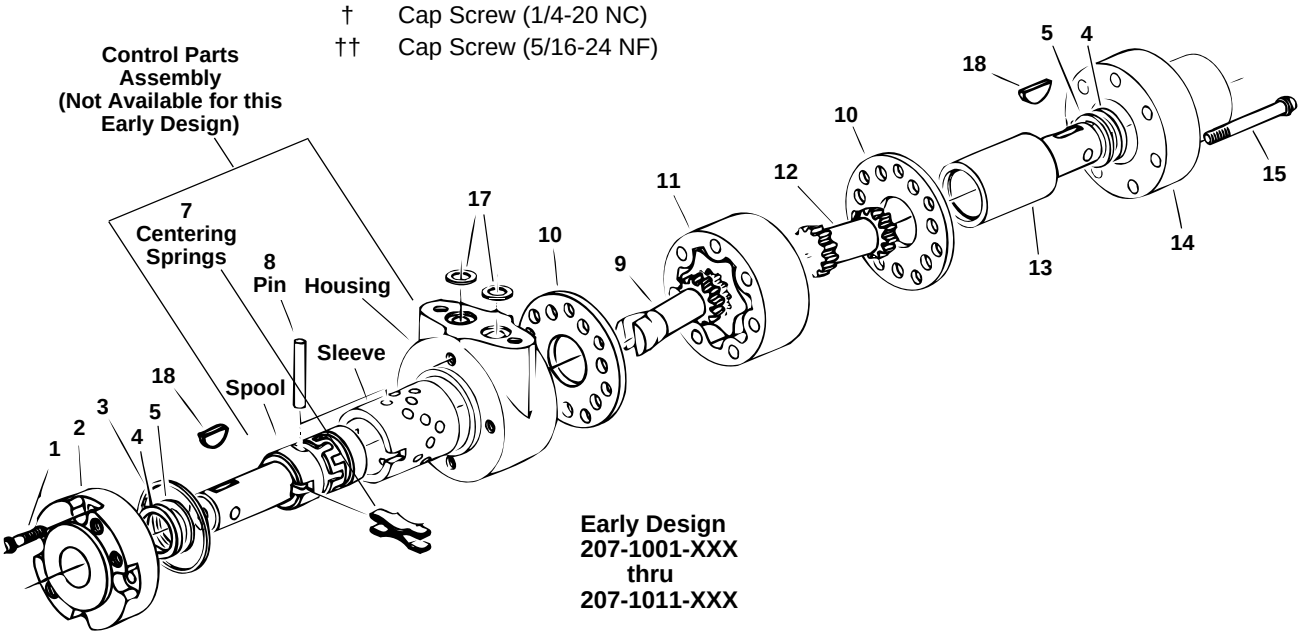

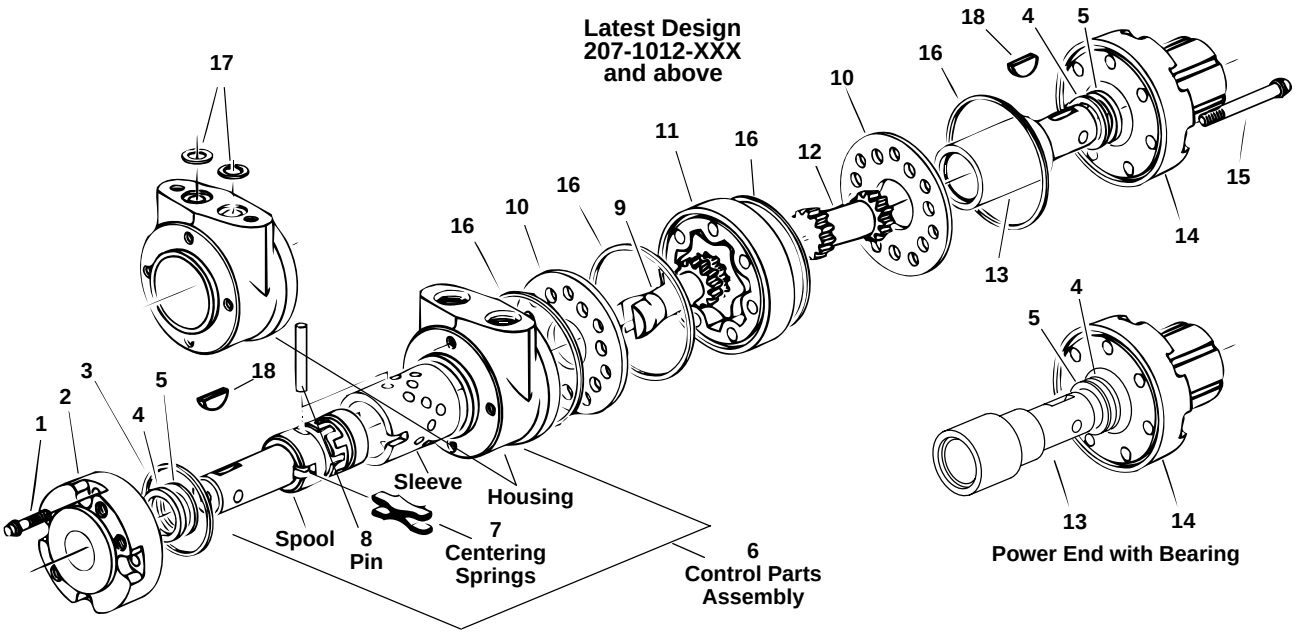

Torque Generator

Item No.	Part Number	Early Design Part Status	Description	Quantity: Early Design, Manifold Ports	Quantity: Latest Design, Manifold Ports	Quantity: Latest Design, 9/16-18 O-ring Ports
1	20145-7		Cap Screw	4	4	4
2	21108		End Cap	1	—	—
	6279		End Cap	—	1	1
3	15049		Seal, O-ring	1	1	1
4	9004-5		Seal, Quad	2	2	2
5	13		Washer, Backup	2	2	2
6	—	N/A	Control Parts Assembly†	1	—	—
	22923		Control Parts Assembly†	—	1	—
	22925		Control Parts Assembly†	—	—	1
	22924		Control Parts Assembly††	—	1	—
	22810		Control Parts Assembly†††	—	1	—
7	64431		Spring Kit, Centering **	1	1	1
8	15		Pin	1	1	1
9	*		Drive, Control End	1	1	1
10	594	N/A	Plate, Spacer	2	—	—
	22368		Plate, Spacer	—	2	2
11	*	N/A	Gerotor	1	—	—
	*		Gerotor	—	1	1
12	*		Drive, Power End	1	1	1
13	142		Shaft, Power End	1	1	1
	22481		Shaft, Power End w/Bearing	—	1	1
14	141	N/A	Housing, Power End	1	—	—
	21312-2		Housing, Power End	—	1	1
	22491		Housing, Power End w/Bearing	—	1	1
15	*		Capscrew, Power End	7	7	7
16	9086-2		Seal	—	4	4
17	15009		Seal, O-ring	2	2	—
18	18033		Key, Woodruff ***	2	2	2
	21122		Seal Kit (Buna N)			
	64427		Seal Kit (Viton)			

N/A	Not Available (These Items No Longer Available form Eaton)
*	See Displacement Chart — Page 2 (Displacement and Product Numbers on Page 4)
**	Includes Spacers (2) for Low Input Torque Spring Package or (6) Springs for the Standard Spring Package
***	Included Only with Special Models
†	Standard Shaft w/Crosshole and Key Slot
††	Standard Shaft w/Crosshole and Key Slot and Low Torque Spring Package
†††	Tang Drive Shaft End (Special)

Torque Generator

How to Order Replacement Parts

Each Order Must Include the Following:

1. Product Number
2. Date Code
3. Part Name
4. Part Number
5. Quantity of Parts

Ports	Displacement cu.cm./rev. [cu. in./rev.]	Product Number	Feature or Status
Manifold	101 [6.2]	207-1001-006	Mounting Face as Cast—N/A
Manifold	167 [10.2]	207-1002-006	Mounting Face as Cast—N/A
Manifold	96 [5.9]	207-1012-001	Mounting Face as Cast—N/A
Manifold	160 [9.7]	207-1013-001	Mounting Face as Cast—N/A
9/16-18 UNF	96 [5.9]	207-1016-001	Mounting Face as Cast—N/A
9/16-18 UNF	160 [9.7]	207-1017-001	Mounting Face as Cast—N/A
9/16-18 UNF	76 [4.7]	207-1049-001	Machined Mounting Face Each End
9/16-18 UNF	96 [5.9]	207-1050-001	Machined Mounting Face Each End
9/16-18 UNF	160 [9.7]	207-1048-001	Machined Mounting Face Each End
Manifold	76 [4.7]	207-1030-001	Machined Mounting Face Each End
Manifold	96 [5.9]	207-1015-001	Machined Mounting Face Each End
Manifold	160 [9.7]	207-1020-001	Machined Mounting Face Each End
Manifold	76 [4.7]	207-1051-001	Power End w/Bearing and Machined Faces
Manifold	96 [5.9]	207-1028-001	Power End w/Bearing and Machined Faces
Manifold	160 [9.7]	207-1052-001	Power End w/Bearing and Machined Faces

N/A — Not Available (Choose Replacement Unit from Current Models on this List)

Early Design

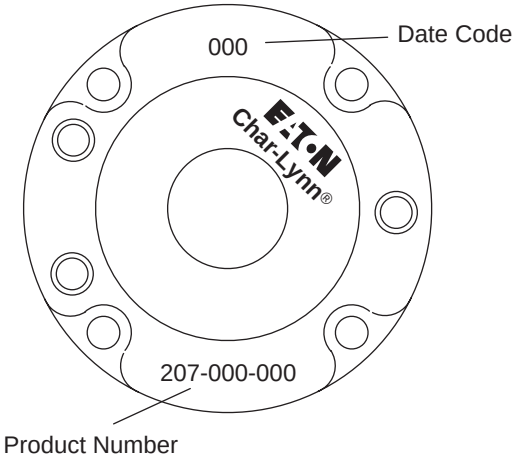

Latest Design

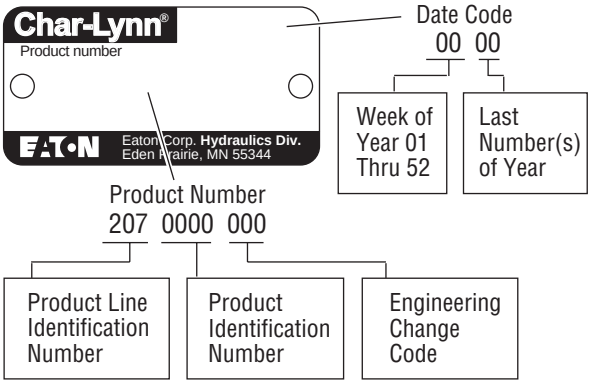

Eaton
Fluid Power Group
Hydraulics Business USA
14615 Lone Oak Road
Eden Prairie, MN 55344
USA
Tel: 952-937-9800
Fax: 952-294-7722
www.eaton.com/hydraulics

Eaton
Fluid Power Group
Hydraulics Business Europe
Route de la Longeraie 7
1110 Morges
Switzerland
Tel: +41 (0) 21 811 4600
Fax: +41 (0) 21 811 4601

Eaton
Fluid Power Group
Hydraulics Business Asia Pacific
11th Floor Hong Kong New World Tower
300 Huaihai Zhong Road
Shanghai 200021
China
Tel: 86-21-6387-9988
Fax: 86-21-6335-3912

Powering Business Worldwide

© 2008 Eaton Corporation
All Rights Reserved
Printed in USA
Document No. C-STTQ-TP001-E
Supersedes 06-318
October 2008