Char-Lynn®
Power Steering

November, 1996

Repair Information

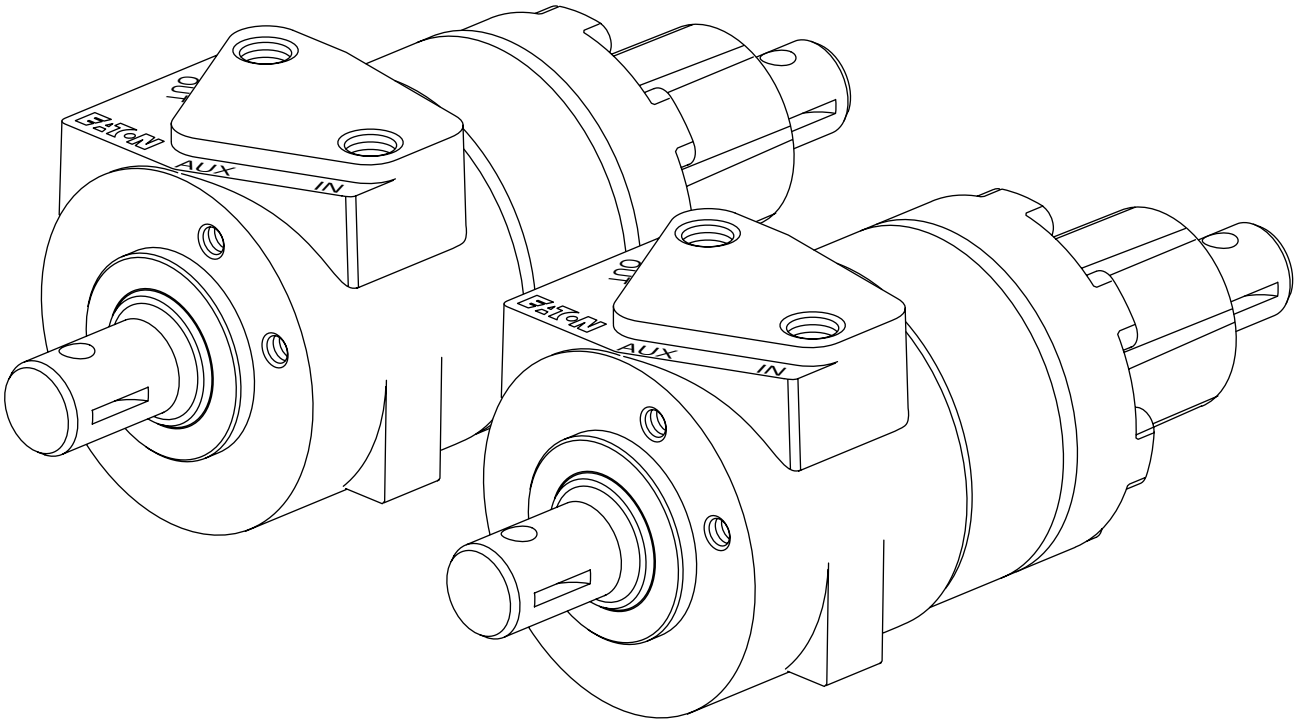

217 Series and 227 Series Torque Generators

002

217 Series Torque Generators

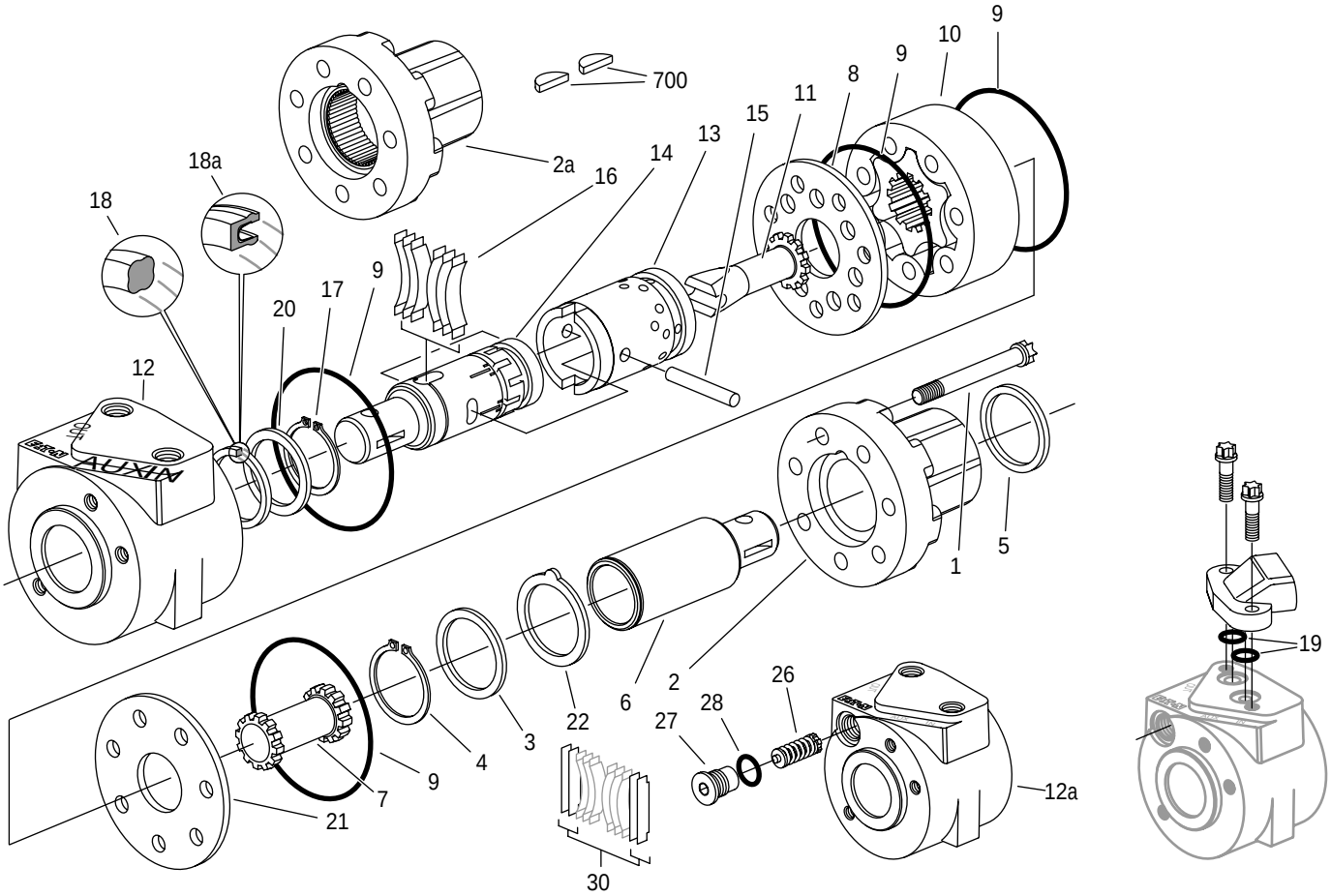

1	Screw, Cap, (7)	15	Pin
2	Housing, Power End	16	Spring, Centering (for Standard Input Torque) (6)
2a	Housing, Power End (bearings, needle type)	17	Ring, Retaining
3	Washer	18	Seal, Quad
4	Ring, Retaining	18a	Seal, Shaft (Lip Type)
5	Seal, Quad	19	O-ring (2)
6	Shaft, Power End	20	Washer
7	Drive, Power End	21	Plate, Spacer
8	Plate, Spacer	22	Washer
9	Seal, O-ring (4)	26	Relief Valve S/A
10	Gerotor	27	Plug
11	Drive, Control End	28	O-ring
12	Housing, Valve	30	Spacer, Spring (for Increased Input Torque) (4)
12a	Housing, Valve (for Inlet Relief Valve)	700	Key, Woodruff (2)
13	Sleeve		
14	Spool		

227 Series Torque Generators

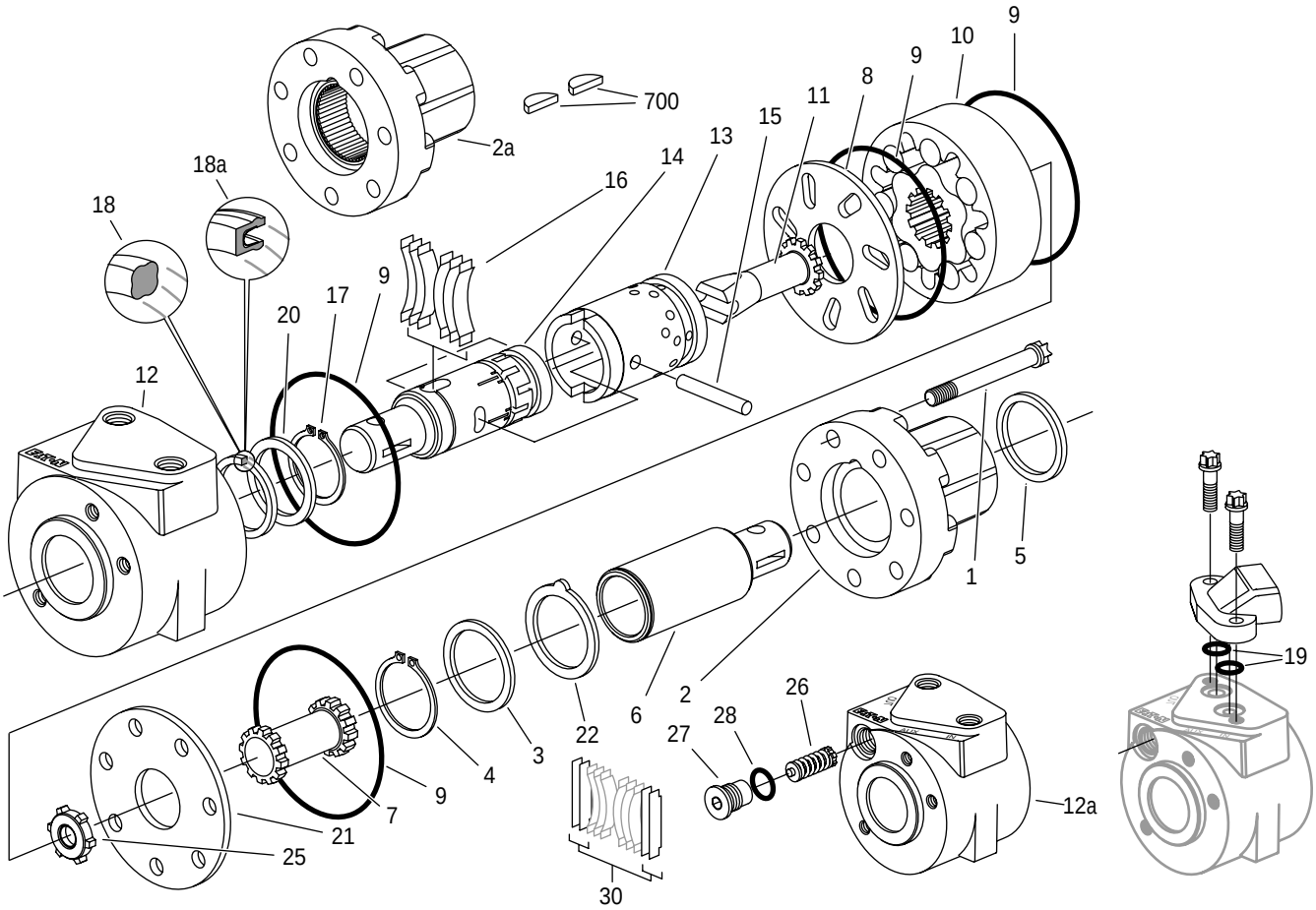

1	Screw, Cap (7)	15	Pin
2	Housing, Power End	16	Spring, Centering (for Standard Input Torque) (6)
2a	Housing, Power End (bearings, needle type)	17	Ring, Retaining
3	Washer	18	Seal, Quad
4	Ring, Retaining	18a	Seal, Shaft (Lip Type)
5	Seal, Quad	19	O-ring (2)
6	Shaft, Power End	20	Washer
7	Drive, Power End	21	Plate, Spacer
8	Plate, Spacer	22	Washer
9	Seal, O-ring (4)	25	Spacer
10	Geroler®	26	Relief Valve S/A
11	Drive, Control End	27	Plug
12	Housing, Valve	28	O-ring
12a	Housing, Valve (for Inlet Relief Valve)	30	Spacer, Spring (for Increased Input Torque) (4)
13	Sleeve	700	Key, Woodruff (2)
14	Spool		

Geroler® is a registered trade name of Eaton Corporation

227 Series Torque Generators

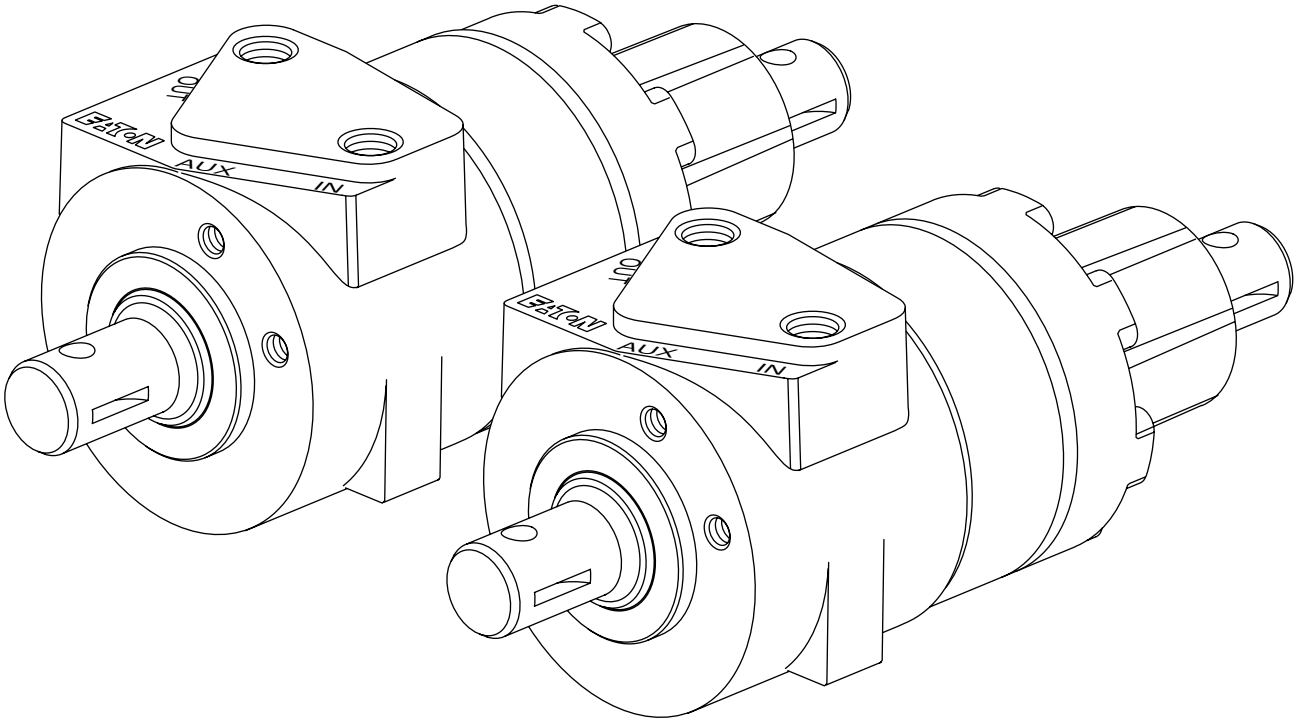

The following repair information may be used to inspect and/or repair the 217 Series or 227 Series Torque Generator.

Tools Required:
- Ratchet Wrench
- 5/16 inch thin walled 12 point drive or 6 point drive (E10) socket (Part No. 64489-000)
- Small screwdriver (6,3 mm [1/4 inch] flat blade)
- Small breaker bar or ratchet wrench
- Torque wrench (28 Nm [250 in-lb] capacity)

The following tool is not necessary for disassembly or reassembly but is extremely helpful:
- Spring installation tool (part number 600057-000)

The following procedures may be used to completely disassemble and reassemble the 217, and 227 Series Torque Generators.

It is recommended that the torque generator be thoroughly cleaned before any repairs are attempted. When cleaning, be sure all open ports are sealed.

Although not all drawings show the torque generator in a vise or on a bench, we recommend that you follow instructions in the steps as to the placement of parts whether it be in a vice or on the bench.

217 Series and 227 Series Torque Generators

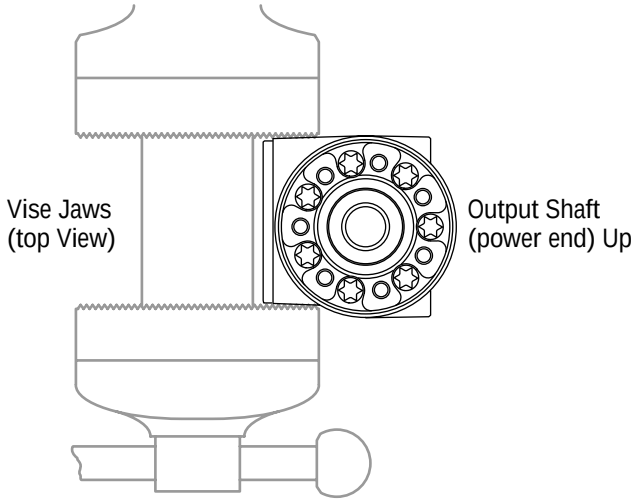

1 To disassemble the torque generator, first support the unit in a vertical position with the seven cap screws up and control end shaft down.

IMPORTANT: When a bench vise is used to support the torque generator, do not to use excessive clamping pressure on the control housing. Excessive pressure can distort the housing. When using a vise, CLAMP ACROSS PORT FACE SIDES ONLY.

2 With the torque generator firmly supported, use a six-point drive (E10) socket wrench and remove seven cap screws (early production units used 12 point drive screws).

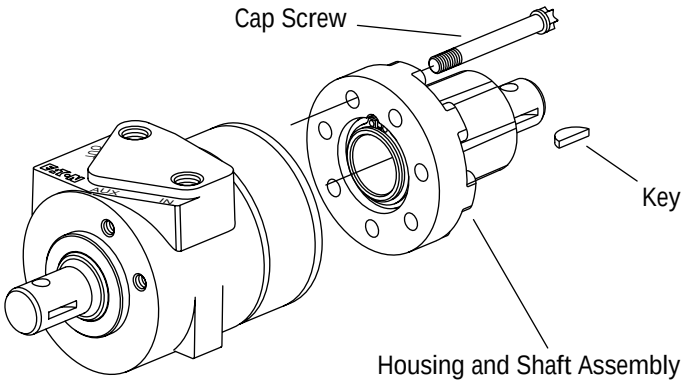

3 Remove the housing (power end) and shaft assembly.

4 Turn the housing and shaft assembly over and remove the shaft with retaining ring in place.

NOTE: In most cases it is not necessary to remove the retaining ring from the shaft.

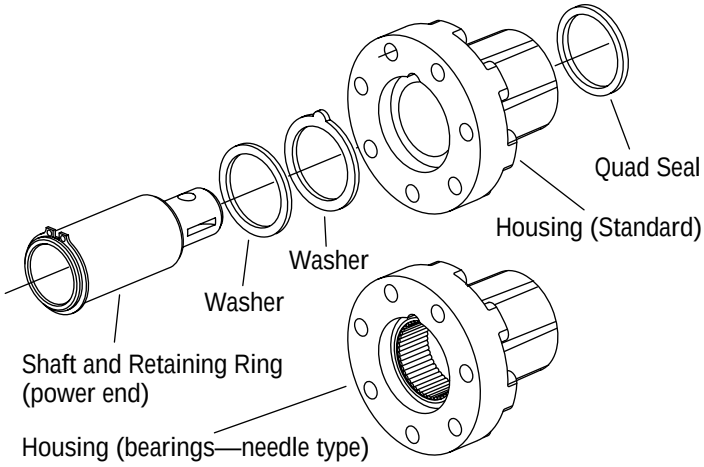

5 Remove both washers from the housing (power end), and reposition the housing with seal end up. Use small screwdriver or similar tool to remove quad seal from the housing. Housing with two bearing sets (needle type) use the same output shaft, quad seal, washers, and retaining ring as the standard housing. However, if bearings are to be replaced they are not sold separately as replacement parts.

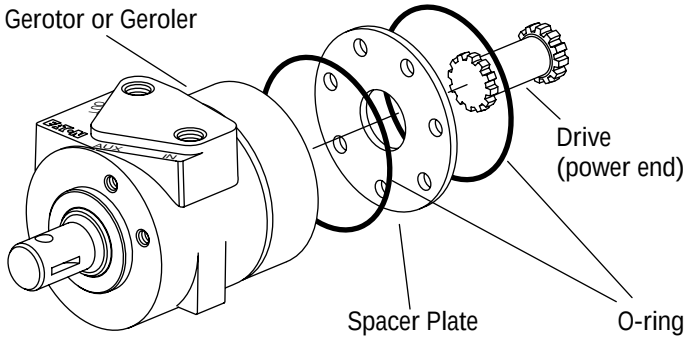

6 Use a small screwdriver or similar tool to remove o-ring from the spacer plate.

7 Remove spacer plate from the gerotor or Geroler.

8 Remove drive (power end) from the gerotor or Geroler.

9 Remove o-ring from the gerotor or Geroler.

217 Series and 227 Series Torque Generators

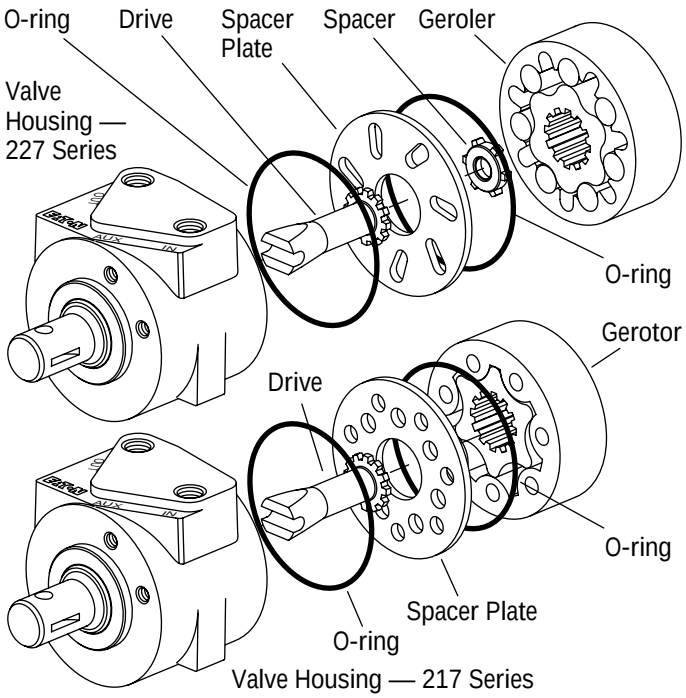

NOTE: Remove the gerotor or Geroler, try to keep all parts together, Geroler has 7 rolls to retain along with the star (step 10).

10 Remove the gerotor or Geroler.

11 Remove the spacer (217 Series will not have this spacer).

12 Using a small screwdriver or similar tool, remove the o-ring from the spacer plate.

13 Remove spacer plate from the valve housing.

14 Again using a small screwdriver or similar tool, remove o-ring from the valve housing.

15 Remove the control end drive from the spool/sleeve assembly in the valve housing.

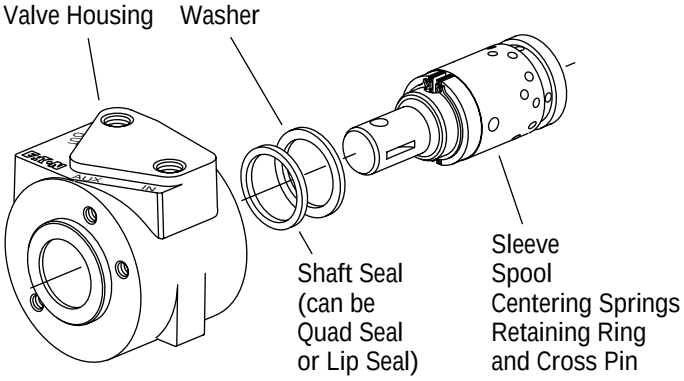

16 Reposition valve housing, shaft horizontal and remove the spool/sleeve assembly.

17 Reposition valve housing shaft end up. Use a small screwdriver or similar tool to remove shaft seal.

18 Remove the washer from spool/sleeve assembly.

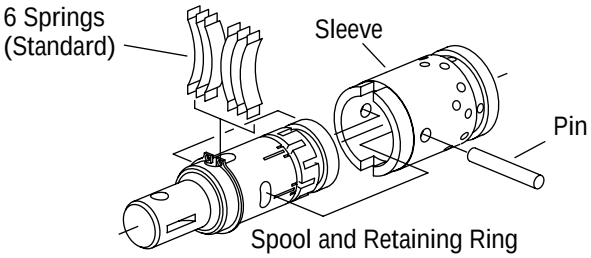

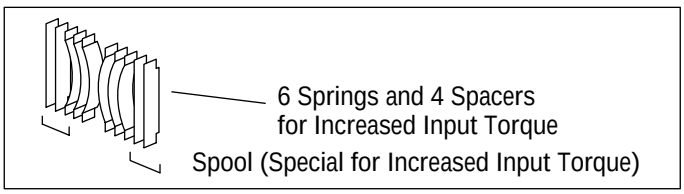

19 To separate spool from the sleeve, the cross pin must be removed. To remove the cross pin, use a small screwdriver or similar tool and push pin from the spool/sleeve.

20 With cross pin removed, push spool forward to disengage the control spool and centering springs from the sleeve.

NOTE: To prevent possible loss of the (six) centering springs, cover the control spool and springs with a clean shop towel when pushing springs from the spool. This will help contain springs in one location (step 21).

21 Remove centering springs from the control spool (and if applicable, four spring spacers). Retaining ring on spool need not be removed if no damage is apparent.

217 Series and 227 Series Torque Generators

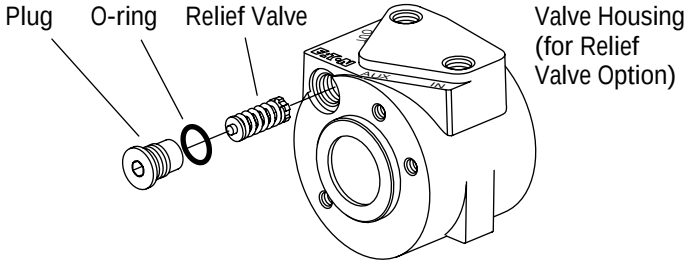

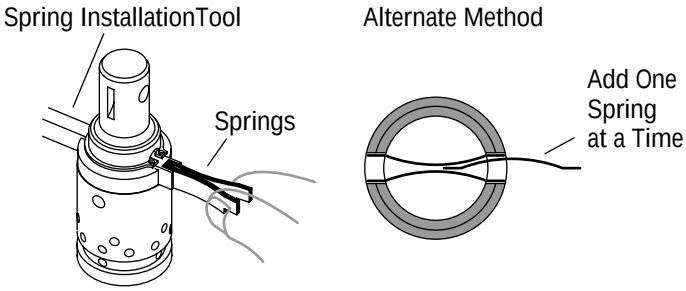

NOTE: Valve housing with inlet relief valve has one o-ring on the plug. After o-ring replacement, install relief valve and plug into valve housing and torque plug to 41-46 Nm [30-34 lb-ft].

Reassembly Procedures

Replace all worn and damaged parts, also a good service policy is to replace all seals. Lubricate all seals with petroleum jelly, and also lubricate all mating surfaces with good clean hydraulic fluid for ease of reassembly and to provide instant lubrication between rotating parts at start-up.

22 Lubricate the spool and install it into the sleeve, align the centering spring opening of the spool with the spring notches in the sleeve.

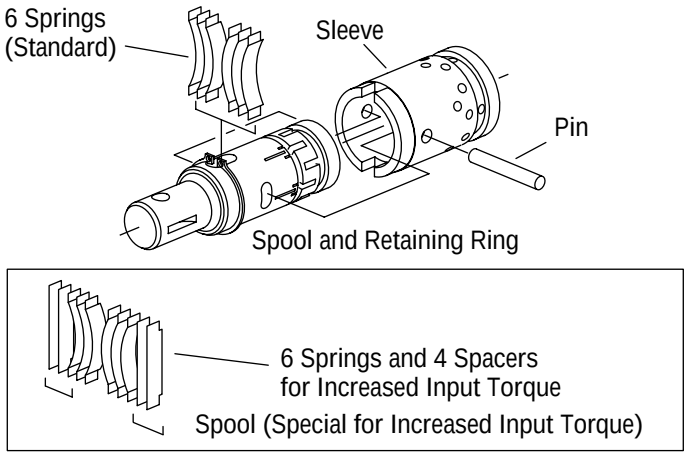

23 In preparation of installing the control spool and sleeve centering spring set, stand all springs on a clean flat surface with the notched side of the centering spring pointed down. Next, place centering springs with arched side of each set of three pointing toward each other as shown above.

24 To install centering springs, first insert spring installation tool through spring openings in the spool/sleeve. Insert one end of the entire centering spring set (with notched side toward the spool/sleeve) into the spring installation tool. Compress extended ends of the centering spring set and push springs into the spool/sleeve (do not pull on the spring tool), installation tool will guide the springs through the spool and sleeve. Increased Input torque spring package has four spring spacers, two on each of the out sides of the six springs.

NOTE: When spring installation tool is not available, the centering springs may be installed by hand. First install two (2) outside springs and add the others one at a time in between previously installed outside springs.

25 With spring set installed, center spring sets within the sleeve and push down on the spool until top of the centering springs are flush with upper surface of the sleeve.

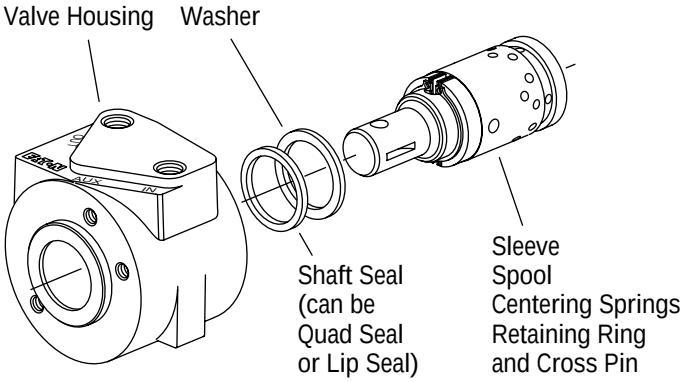

217 Series and 227 Series Torque Generators

26 Install the cross pin into the spool/sleeve.

27 Lubricate and install the washer into the valve housing.

Note: The input shaft seal has had two different configurations and both seal types (Quad or Lip), have been addressed in the steps below.

28 — Quad Seal In preparation of installing the quad seal, first install the spool/sleeve assembly into the valve housing backwards, shaft end up. Carefully retain the spool/sleeve and washer assembly in the valve housing, and turn the assembly over, support it on a clean flat surface. Temporarily installing these shaft parts in the valve housing in the opposite direction from which was originally intended will create a groove or pocket into which the quad seal can be easily installed from the input end of the valve housing.

29 — Quad Seal Lubricate and install the quad seal in its seat.

30 — Quad Seal After seal installation, make sure the seal is not twisted. Turn the valve housing over and remove the spool/sleeve assembly.

31 — Lip seal Insert this seal into valve housing (without shaft installed) from the inside and guide it with your finger all the way into the seal groove, the seal lip must be positioned so it is towards the inside of the valve housing.

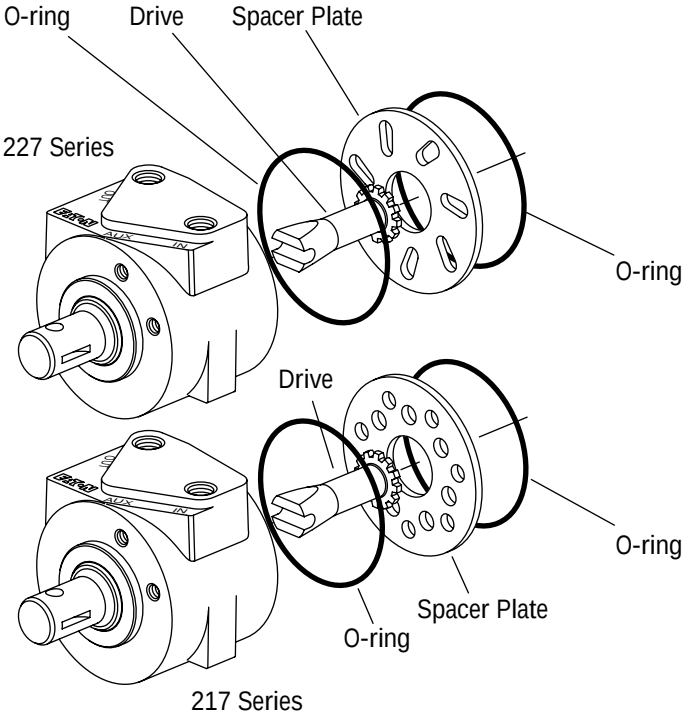

NOTE: Careful insertion of input shaft upon reassembly will prevent shaft seal damage (step 32).

32 With the washer still resting firmly in the valve housing, lubricate the spool/sleeve assembly and carefully install it in the valve housing shaft end down.

33 Lubricate the valve housing o-ring and install it into the valve housing.

34 Install the control end spacer plate, aligning the cap screw holes and porting passages with the matching holes in the control valve housing.

35 Lubricate and install the o-ring in the groove located in the spacer plate.

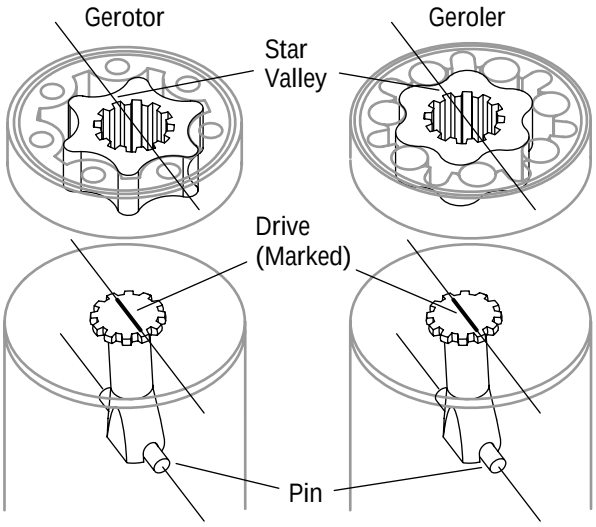

36 The preferred method of drive installation is to mark the drive with a felt tip pen, as shown here. Mark the splined end of the drive, from tooth-to-tooth, with a line that parallels the slotted end of the drive. This method helps assures proper alignment of the drive and gerotor or Geroler star (meter section).

37 Install the drive, make sure you fully engage the slot on the end of the drive with the cross pin in the spool and sleeve assembly.

38 This illustration (above) shows the correct relationship of the spool/sleeve assembly cross pin and the gerotor or Geroler star for proper torque generator timing.

39 With the o-ring groove side of the outer ring facing upward, install the gerotor or Geroler by aligning any two star valleys with the previously marked drive. After engaging the gerotor or Geroler star with the marked drive, rotate the outer ring of the gerotor or Geroler to align with the threaded holes in the valve housing.

217 Series and 227 Series Torque Generators

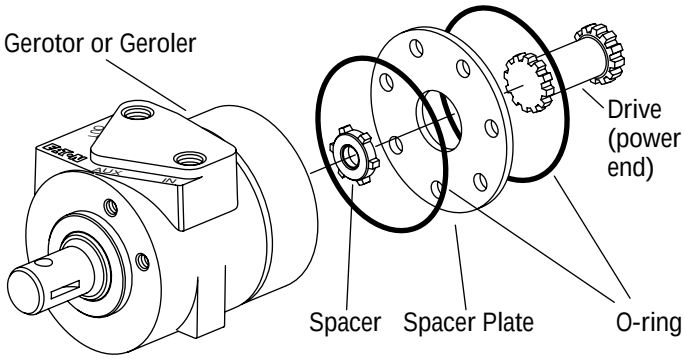

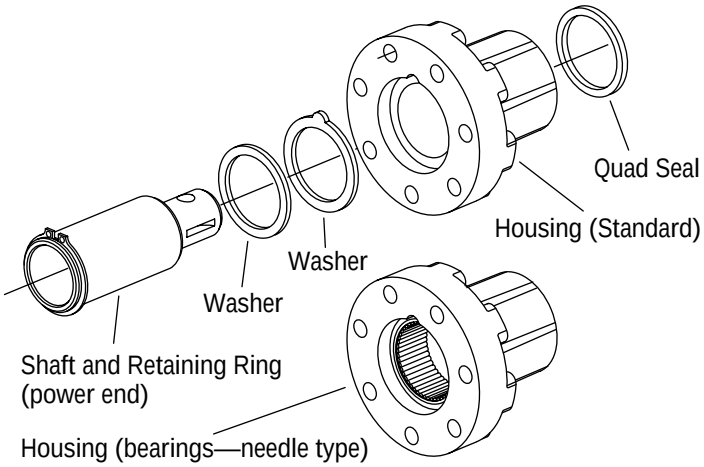

40 Lubricate and install the o-ring into the gerotor or Geroler.

NOTE: Spacer is used only with 227 Series (step 41).

41 Install the spacer in the Geroler star.

42 Lubricate and install the drive into the gerotor or Geroler star.

NOTE: The spline on one end of the drive is not as thick as the other and this thinner spline end must be installed into the gerotor or Geroler star.

43 Lubricate and install the spacer plate, with the seal groove side facing upward. Install by aligning the cap screw holes with the matching holes in the gerotor or Geroler.

44 Lubricate and install the o-ring in the groove located in the spacer plate.

45 Lubricate and install the quad seal in the groove located in the power end housing.

46 After installing, make sure the quad seal is not twisted and is firmly seated in its groove.

47 With the quad seal installed, turn the power end housing over and support it in an upright position (surface with seven mounting holes up). Lubricate and install the first washer by aligning the bump on the washer with the matching recess in the power end housing.

48 Lubricate and install the second washer in the power end housing.

NOTE: Careful reassembly will prevent shaft seal damage when pushing the power end shaft into place (step 49).

49 Lubricate and install the power end shaft in the housing.

50 Before engaging the power end housing assembly, align the input and output shaft keyways and cross holes. Spline on the drive and the spline in the power end shaft should line up. With the power end assembly installed, rotate housing to align cap screw holes.

51 Install the cap screws and torque in a crisscross sequence to 23 Nm [200 in-lb].

52 The torque generator is now ready for test and installation.

217 Series and 227 Series Torque Generators

Notes

217 Series and 227 Series Torque Generators

For Additional Literature Contact Eaton Corp. Hydraulics Division 15151 Highway 5 Eden Prairie, MN 55344.

- Specifications and performance Data, Catalog No. 11-302
- Replacement Part Numbers and Kit Information: 217 Series and 227 Series — Parts Information No. 6-324.

How to Order Replacement Parts

Each Order Must Include the Following:

1. Product Number
2. Date Code
3. Part Name
4. Part Number
5. Quantity of Parts

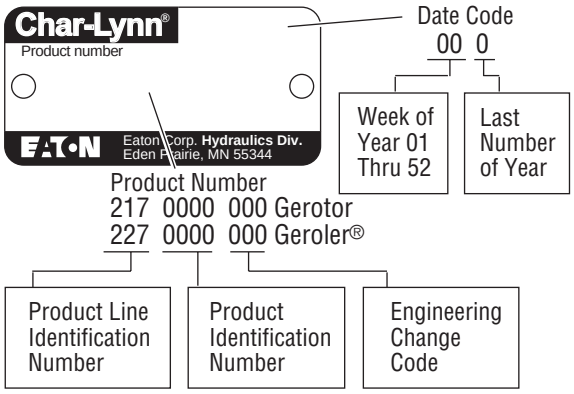

Eaton
Fluid Power Group
Hydraulics Business USA
14615 Lone Oak Road
Eden Prairie, MN 55344
USA
Tel: 952-937-9800
Fax: 952-294-7722
www.eaton.com/hydraulics

Eaton
Fluid Power Group
Hydraulics Business Europe
Route de la Longeraie 7
1110 Morges
Switzerland
Tel: +41 (0) 21 811 4600
Fax: +41 (0) 21 811 4601

Eaton
Fluid Power Group
Hydraulics Business Asia Pacific
11th Floor Hong Kong New World Tower
300 Huaihai Zhong Road
Shanghai 200021
China
Tel: 86-21-6387-9988
Fax: 86-21-6335-3912

Powering Business Worldwide

© 2008 Eaton Corporation
All Rights Reserved
Printed in USA
Document No. C-STTQ-TS001-E
Supersedes 07-312
December 2008