Char-Lynn®

Steering Control Unit

Repair Information

Flex 4 Steering Control Unit -003

Disassembly

Tools required for disassembly and reassembly.

— 6 Point (E10) Drive part No. 64489-000.*

— Breaker bar wrench.

— Torque wrench (30 Nm [275 lb-in] capacity).

* Tools available—by special order—through our service department.

Cleanliness is extremely important when repairing a steering control unit. Work in a clean area. Before disconnecting lines, clean port area of unit thoroughly. Use a wire brush to remove foreign material and debris from around exterior joints of the unit.

Important: Scribe (mark) a line across housing, gerotor and mounting cap for reference alignment when unit is reassembled.

1 Disassemble steering control unit as shown below.

Note: This unit should be disassembled with the shaft end up in the vertical position (as shown on page 3).

Important: See placement of the two check balls (reference No. 7). Use caution when disassembling spool (ref. No. 5) and sleeve (ref. No. 6), loss of these parts are possible.

Note: All housing valves are factory adjusted on assembled units to a code designation and are not to be changed. This housing (with specified valve pressure settings), the mating spool, and the sleeve are not practical replacement parts.

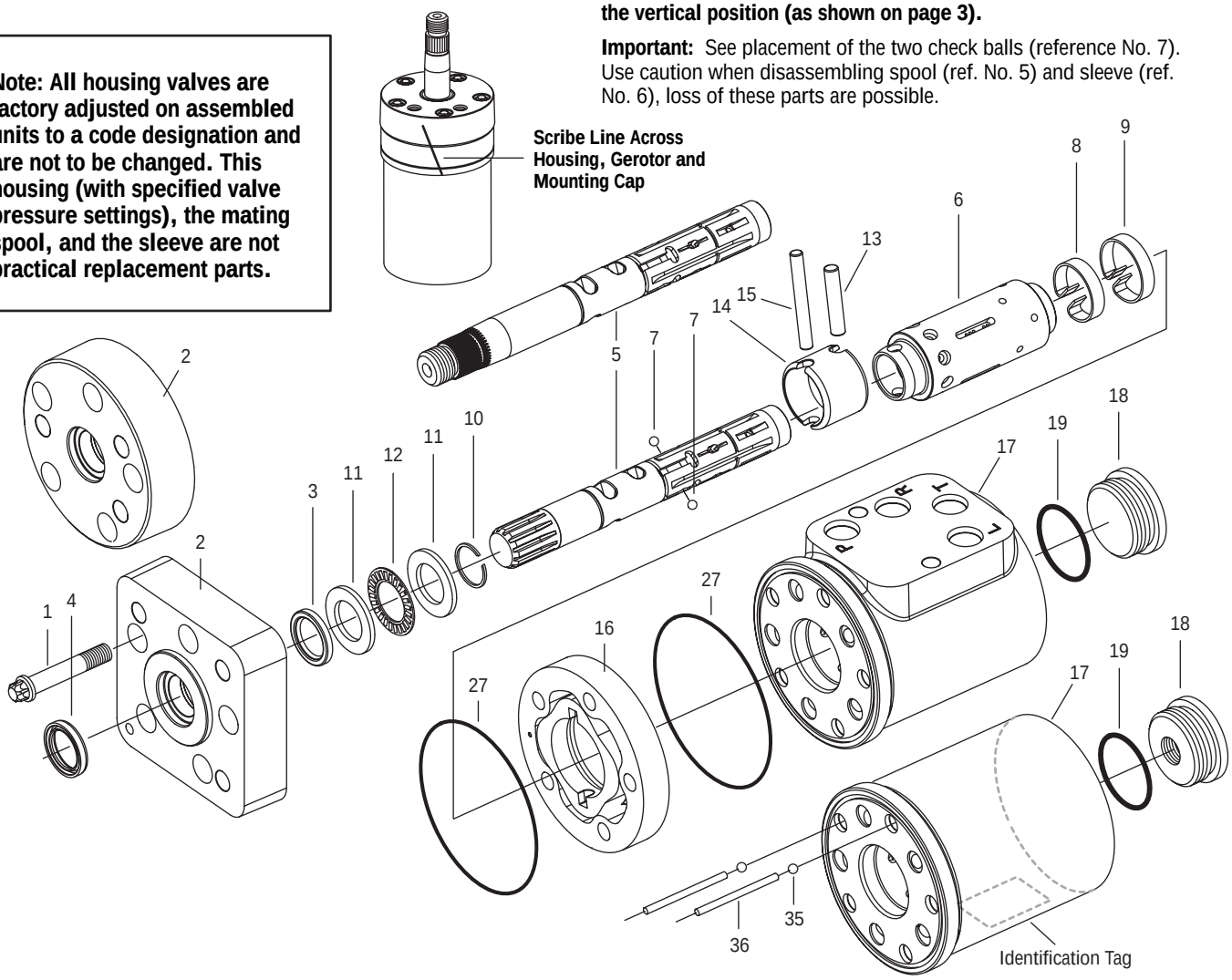

Ref. No.	Description
1	Screw, Cap
2	Mounting Cap
3	Seal, Pressure
4	Seal, Dust
5	Spool
6	Sleeve
7	Ball

Ref. No.	Description
8	Spring, Centering
9	Spring, Centering
10	Ring, Retaining
11	Race, thrust
12	Bearing, Thrust
13	Drive Pin (Short)
14	Drive, Tube

Ref. No.	Description
15	Drive Pin (Long)
16	Gerotor
17	Housing
18	Plug, Tank
19	O-ring
35	Ball (Optional)
36	Pin, Roll (Optional)

Reassembly

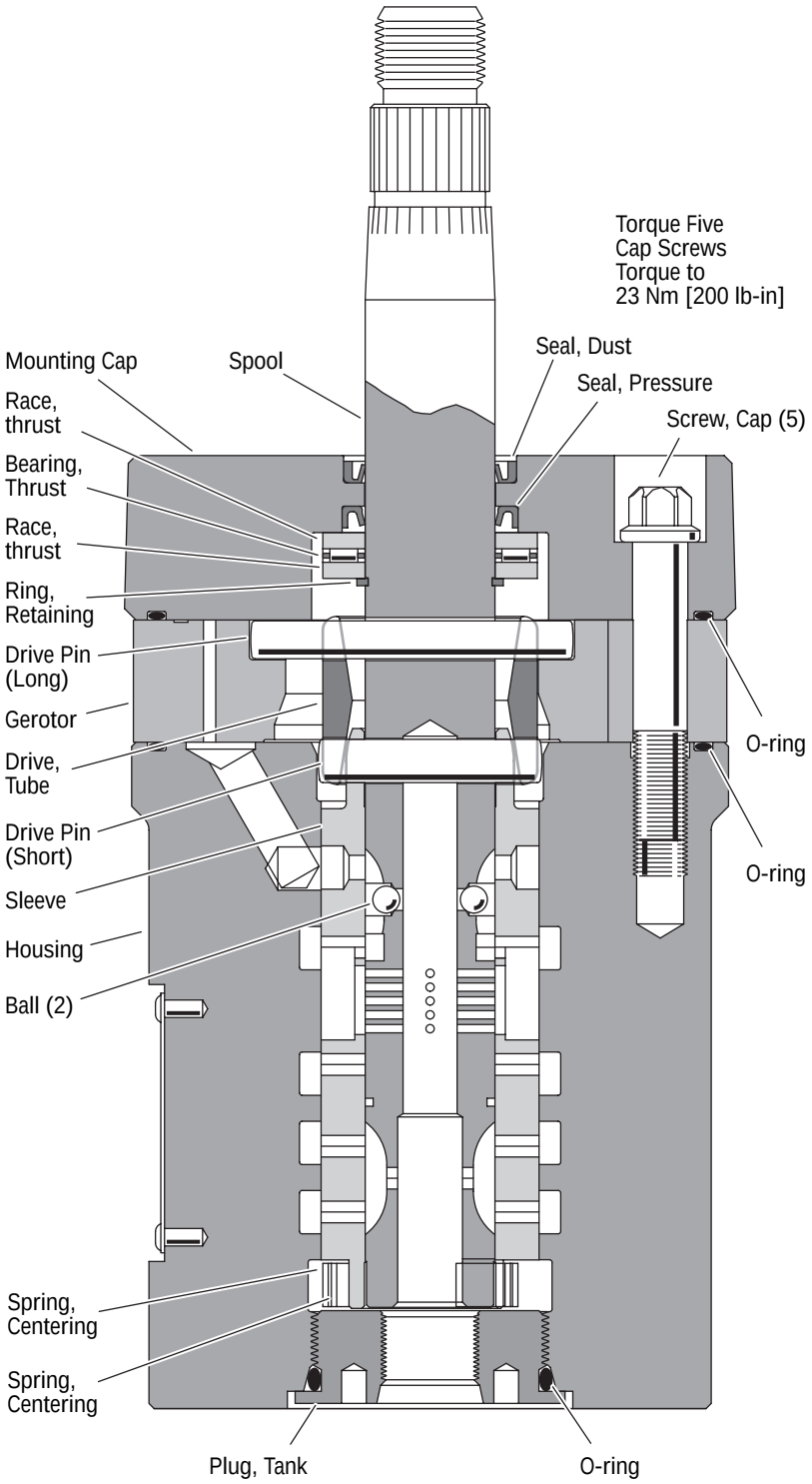

1 Install o-ring (82,6 [3.25] OD) on tank plug.

2 Assemble tank plug into housing. Torque tank plug to 47,5 Nm [35 lb-ft].

3 Assemble cylinder relief valves (reference No.s 35 and 36 when applicable)

4 Install housing o-ring (82,6 [3.25] OD) into groove.

5 Lay gerotor on the housing, lining up bolt holes, check alignment per scribed (mark) line (last instruction before any disassembly — see **Important: Scribe …** - page 2).

6 Install pressure seal into inside cavity of mounting cap (25,4 [1.00] OD x 4,0 [.16] W).

7 Install dust seal (25,4 [1.00] OD x 3,2 [.12] W) into mounting cap.

8 Install manual steering balls (2) into spool. Grease balls to retain in holes.

9 Insert spool into sleeve, lining up the spring slots.

10 Install smaller centering spring onto spool/ sleeve assembly.

11 Install larger centering spring onto spool/ sleeve assembly.

12 Insert shorter drive pin.

13 Install drive tube to assembly, wider groove downward.

14 Slide spool/sleeve/tube assembly into housing bore, through the gerotor star. Before spool/sleeve/tube reaches the tank plug, line up pin slot in gerotor with pin slot in drive tube, insert longer drive pin, then continue to slide spool/sleeve/tube into housing until the pin sets into the gerotor.

15 Install the retaining ring into groove on spool.

16 Install bearing race-bearing-bearing race onto the retaining ring.

17 Grease o-ring (82,6 [3.25] OD) and install into mounting cap.

18 Carefully Install mounting cap over spool so as not to cut or damage seals. Lining up bolt holes, check alignment per scribed (mark) line (last instruction before any disassembly — see **Important: Scribe …** - page 2).

19 Install 5 bolts. Torque to 23 Nm [200 in-lb].

How to Order Replacement Parts

Each Order Must Include the Following:

1. Product Number
2. Date Code
3. Part Name
4. Part Number
5. Quantity of Parts

For more detailed information contact Eaton Hydraulics 14615 Lone Oak Road Eden Prairie, MN 55344.

- Specifications and performance data, Catalog 11-872.
- Replacement part numbers and kit information — Parts Information 06-00-000.
- Seal Kit — 04-03-364

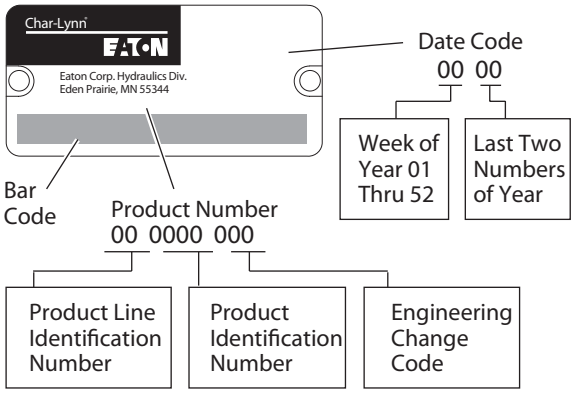

Eaton
Fluid Power Group
Hydraulics Business USA
14615 Lone Oak Road
Eden Prairie, MN 55344
USA
Tel: 952-937-9800
Fax: 952-294-7722
www.eaton.com/hydraulics

Eaton
Fluid Power Group
Hydraulics Business Europe
Route de la Longeraie 7
1110 Morges
Switzerland
Tel: +41 (0) 21 811 4600
Fax: +41 (0) 21 811 4601

Eaton
Fluid Power Group
Hydraulics Business Asia Pacific
11th Floor Hong Kong New World Tower
300 Huaihai Zhong Road
Shanghai 200021
China
Tel: 86-21-6387-9988
Fax: 86-21-6335-3912

Powering Business Worldwide

© 2009 Eaton Corporation
All Rights Reserved
Printed in USA
Document No. C-STCU-TS013-E
Supersedes 07-03-316
March 2009