Service Data

Vickers®

Steering

Power Steering Pumps

VTM40/41 Series-12/-14 Design

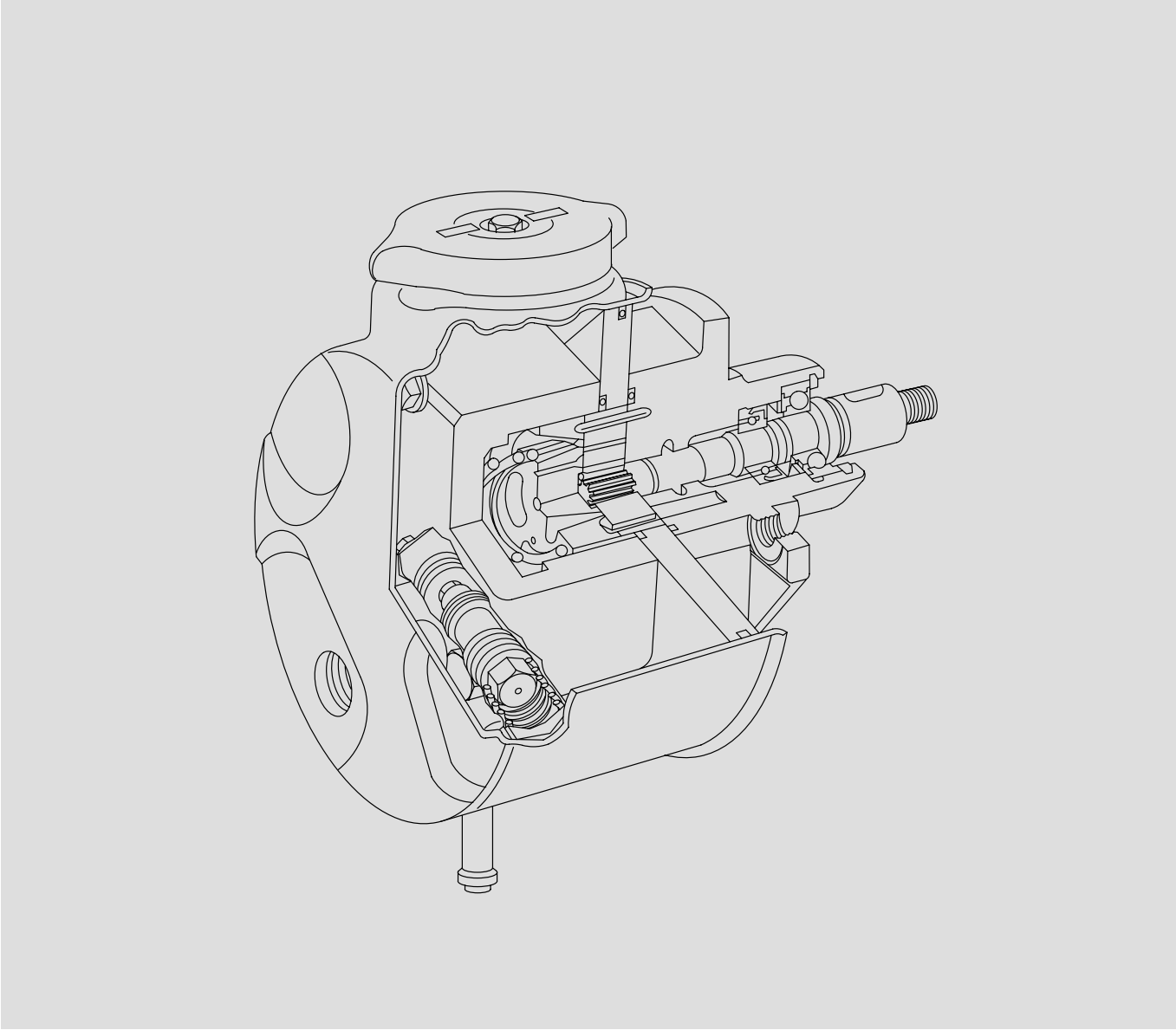

Revised 11/1/85

M-2053-S

Assemble Retaining Ring with sharp edge in direction of arrow.

3X-46351 Screw (2 req'd)

168958 Nameplate

113000 Plug (All VTM40 models and early versions of VTM41 series)

□ 308048 Body S/A

■ 276382 Body S/A

●▲ 213998 O-Ring

●▲ 213998 O-Ring

240431 Adapter

●▲ 154105 O-Ring

■ 148423 Bearing

□ 307569 Bearing & Washer

■ 1606 Key

■ 172376 Retaining Ring

□ 307597 Shaft

■ 276376 Shaft

■ 193732 Retaining Ring

□▲ 213996 Shaft Seal

■● 263585 Shaft Seal

□ 184408 Bearing (Included in body S/A)

□ 99784 Lockwasher (2 req'd)

□ 155846 Mounting Bolt (2 req'd)

●▲ 184177 O-Ring

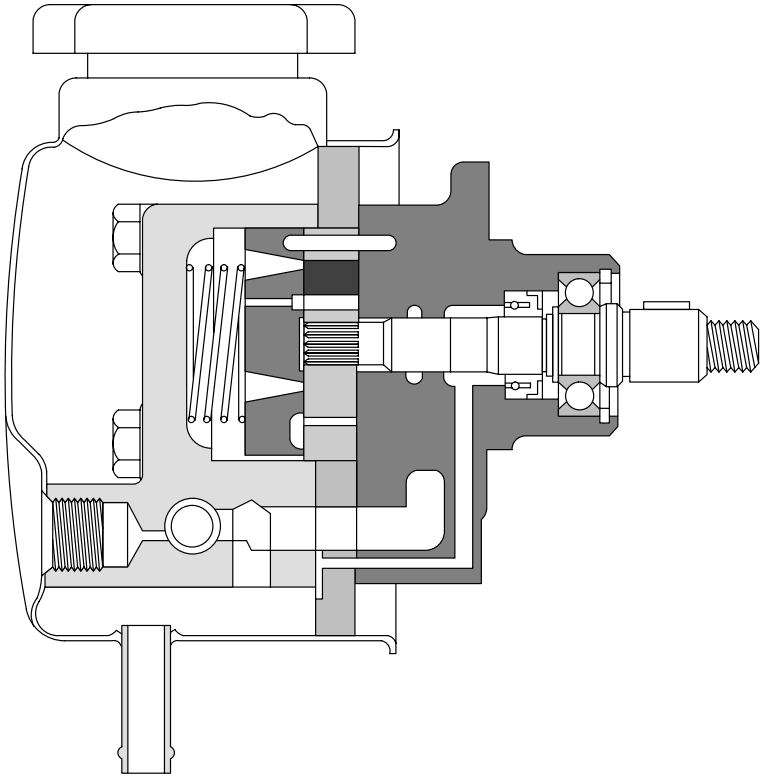

□ Used on VTM40 models

■ Used on VTM41 models

▲ Included in VTM40 Seal Kit 922709

● Included in VTM41 Seal Kit 923083

Model Code

VT M 4* - ** - ** - ** - EN - * 1 - 14

1 2 3 4 5 6 7 8 9 10

1 **Vane Type Pump**

2 **Mobile Application**

3 **Series**

40
41

4 **Capacity**

10 - 1.0 USGPM
15 - 1.5 USGPM
20 - 2.0 USGPM
VTM41 40 - 4.0 USGPM
Only 50 - 5.0 USGPM
60 - 6.0 USGPM

5 **Controlled Flow (1500 RPM @ 100 PSI)**

15 - 1.5 USGPM
20 - 2.0 USGPM
25 - 2.5 USGPM
30 - 3.0 USGPM
35 - 3.5 USGPM
40 - 4.0 USGPM
45 - 4.5 USGPM
55 - 5.5 USGPM
65 - 6.5 USGPM
75 - 7.5 USGPM

6 **Relief Valve Setting**

05 - 500 PSI
07 - 750 PSI
10 - 1000 PSI
12 - 1250 PSI
15 - 1500 PSI

7 **Enclosed Tank**

8 **Pump Rotation Viewed From Shaft End**

R - Right hand (Clockwise
L - Left Hand (Counterclockwise)

9 **#1 Shaft**

10 **Design**

For satisfactory service life of these components, use full flow filtration to provide fluid which meets ISO cleanliness code 20/18/15 or cleaner. Selections from Eaton OFP,OFR and OFRS filter series are recommended.

Printed in U.S.A.