Eaton®
Hydrostatic Transaxle

May, 1999

Parts Information

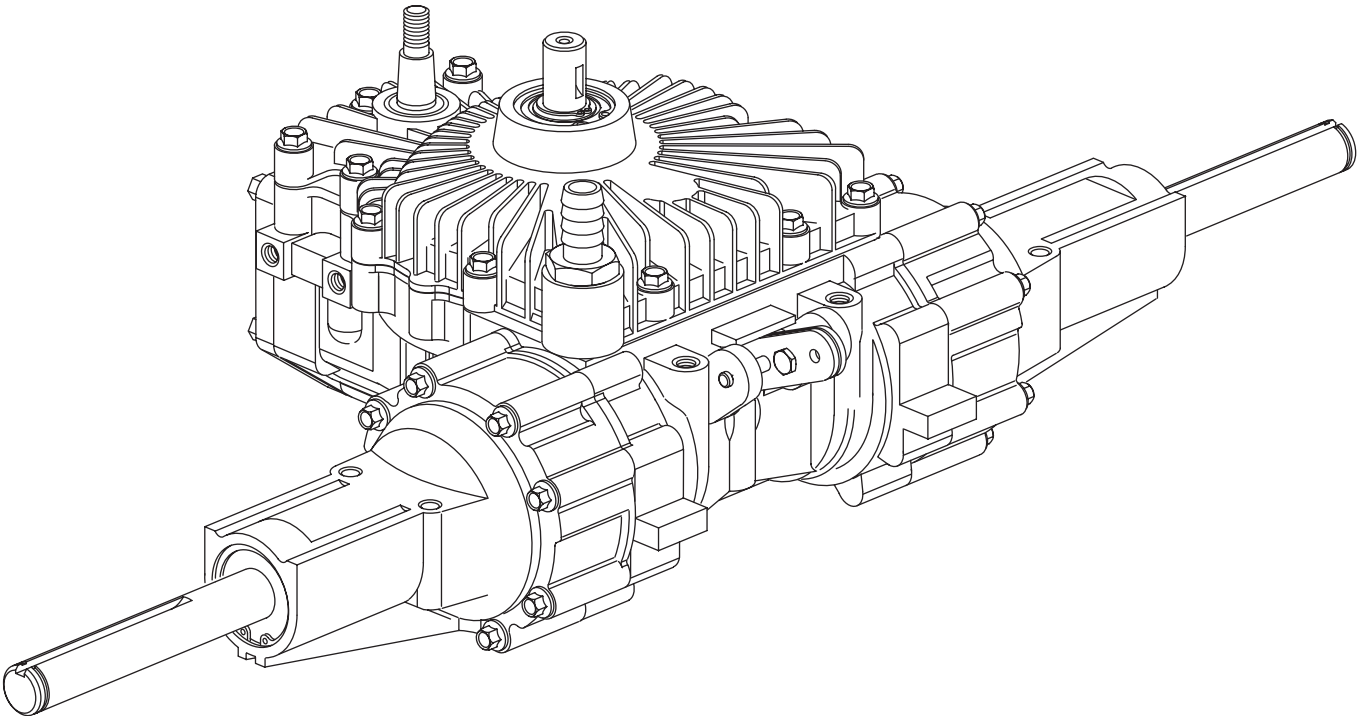

Transaxle Series 751

Series 751

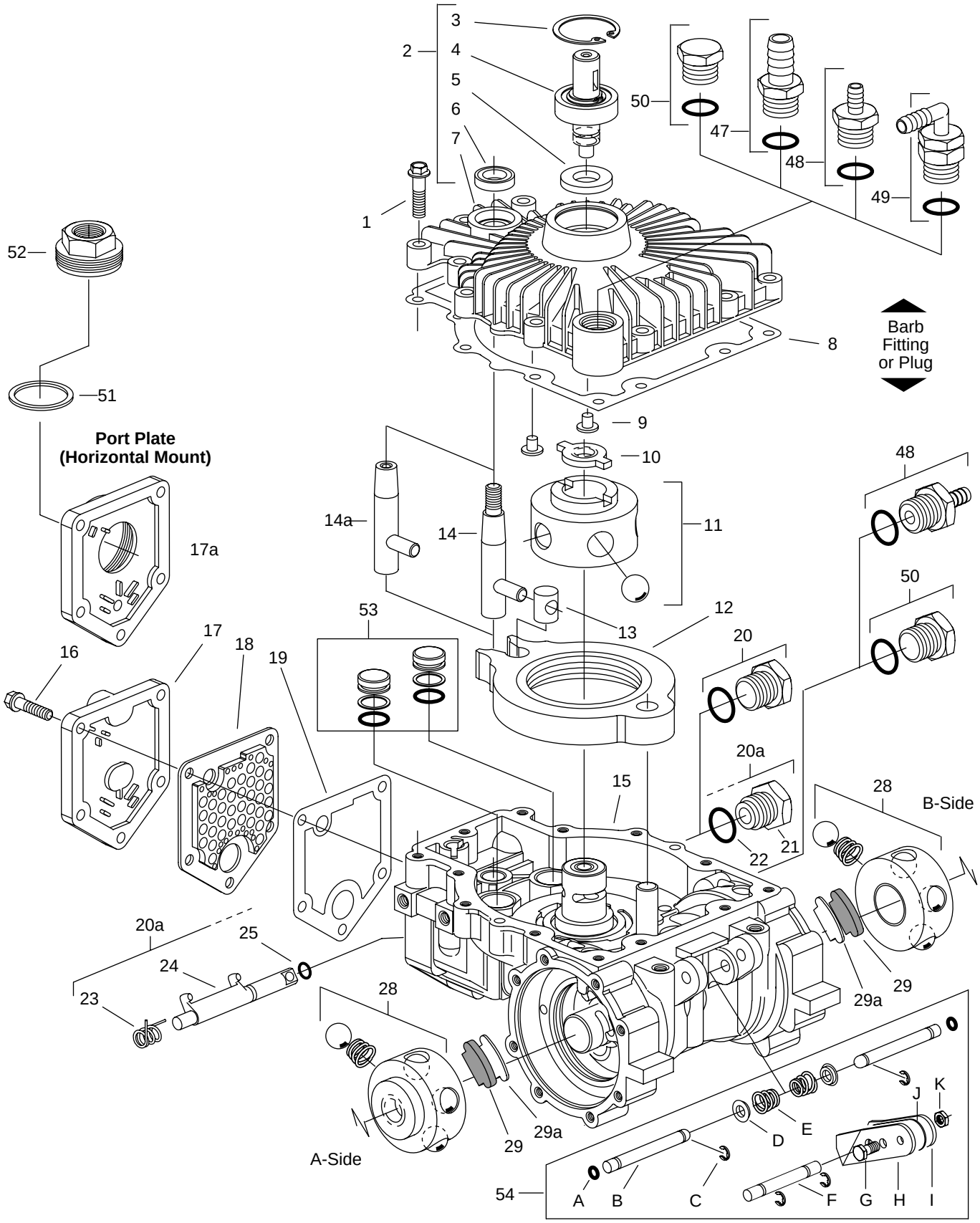
3
2
4
5
6
7
1
50
47
48
49
52
51
Port Plate
(Horizontal Mount)
17a
16
17
18
19
53
8
Barb
Fitting
or Plug
9
10
14a
14
11
13
12
48
50
20
20a
15
28
B-Side
21
22
29
29a
20a
25
24
23
28
29
29a
A-Side
54
A
B
C
D
E
F
G
H
I
J
K

Ref. No.	Part Number	Description	Qty.
1	104436-100	Screw, 1/4-20 Self Tap	13
2	106071	Cover (S/A)	1
3	101680-156	Ring, Retaining, Internal	1
4	106073	Shaft, Input (S/A)	1
5	93955	Seal, Input Shaft	1
6	93895	Seal, Control Shaft	1
7	106070	Cover	1
8	105327	Gasket, Cover	1
9	101597	Button	2
10	104107	Drive	1
11	105228	Pump Rotor/Ball (S/A)	1
	104415	Pump Rotor/Ball/Pin (S/A)	1
12	105813	Cam Ring (S/A)	1
13	103621	Insert	1
14	103611	Control Shaft, External Thrd.	1
14a	104935	Control Shaft, Internal Thrd.	1
15	***	Housing (S/A)	1
16	103757-088	Screw, 1/4-20 Hex Flange	5
17	106201	Cover, Valve	1
17a	106385	Port Plate (Horiz. Mount)	1
18	106202	Filter (Internal)	1
19	106200	Gasket	1
20	106008	Plug/Seal (S/A) **No Dump V**	1
	8785-010	Seal, O-ring	1
20a		**Dump Valve Parts**	1
21	104664	Nut, Dump Valve Fitting	1
22	8785-010	Seal, O-ring	1
23	104684	Spring, Dump Valve	1
24	105660	Bracket, Dump Valve	1
25	8761-013	Seal, O-ring	1
26	103757-225	Screw 5/16 Hex Flange	16
27	106129	Gasket, Axle Housing	2
28	104073	18T Motor Rotor/Ball (S/A)	2
	104551	*15T Motor Rotor/Ball (S/A)*	*2*
29	110185	Pad, Friction	2
29a	110186	Spacer	2
30	106413	18T Plate, Reaction	2
	106414	*15T Plate, Reaction*	*2*
31	106104	Plate, Backup	2
32	104339	18T Sun Gear, First	2
	104338	*15T Sun Gear, First*	*2*
33	106124	Gear, Ring 54T	4
	106027	*Gear, Ring 57T*	*4*
34	106151	18T Planet Gear (S/A) First	6
	106167	*21T Planet Gear (S/A) First*	*6*

*** See Chart on Page 6 — Housing (S/A)

Ref. No.	Part Number	Description	Qty.
35	106157	18T Primary Carrier (S/A)	2
	106174	*15T Primary Carrier (S/A)*	*2*
36	104813	18T Sun Gear, Second	2
	104812	*15T Sun Gear, Second*	*2*
37	106159	18T Plnt Gear (S/A) Second	6
	106169	*21T Plnt Gear (S/A) Second*	*6*
38	106137	Secondary Carrier (S/A)	2
39	106178-000	**Axle Housing (S/A) A-Side**	1
39a	106178-000	**Axle Housing (S/A) B-Side**	1
	106190**	Magnet (S/A)	2
40	106162	Housing, Axle	2
41	103983-098	Ring, Retaining, External	4
42	103966	Thrust Washer	4
43	101680-206	Ring, Retaining, Internal	2
44	104928	Bearing, Ball	2
45	103960	Seal, Radial Lip	2
46	106177-000	Shaft, Axle — A-Side	1
	106177-000	Shaft, Axle — B-Side	1
47	106285	.625 Str. Fitting/O-ring (S/A)	A/R
48	106631	.375 Str. Fitting/O-ring (S/A)	A/R
49	105636	.375 90° Fitting/O-ring (S/A)	A/R
50	106008	Plug/O-ring (S/A)	A/R
	8785-010	O-ring for Fittings (47-50)	A/R
51	8771-130	Seal, Square Cut	1
52	101264	Adapter, 7/8-14 O-ring Port	1
53	***	**Piston, Dampening**	
	104962	Piston (S/A)	2
	105814*	Piston (S/A)	2
54		**Brake Lever Parts**	
A	106450	Quad Seal	2
B	106079	Rod, Push	2
C	106437-000	E-Ring	4
D	106784	Spring Base (S/A)	2
E	106078	Spring, Conical	2
F	106261	Shaft, Brake	1
G	16032-406P	Screw, Cap, Hex	1
H	106128-001	Lever, Brake RH	1
I	106128-002	Lever, Brake LH	1
J	106144-XXX	Shim	A/R
K	16188-4	Nut, Hex, Lock	1
101	104167-000	Square Key (Straight Shaft)	2

*Piston, Dampening (S/A) - Wide Band Neutral - Not Shown (has orifice hole through center).

A/R - as Required (S/A) - Sub Assembly

**Magnet (S/A) - Not Shown (Removal Not Recommended)

Series 751

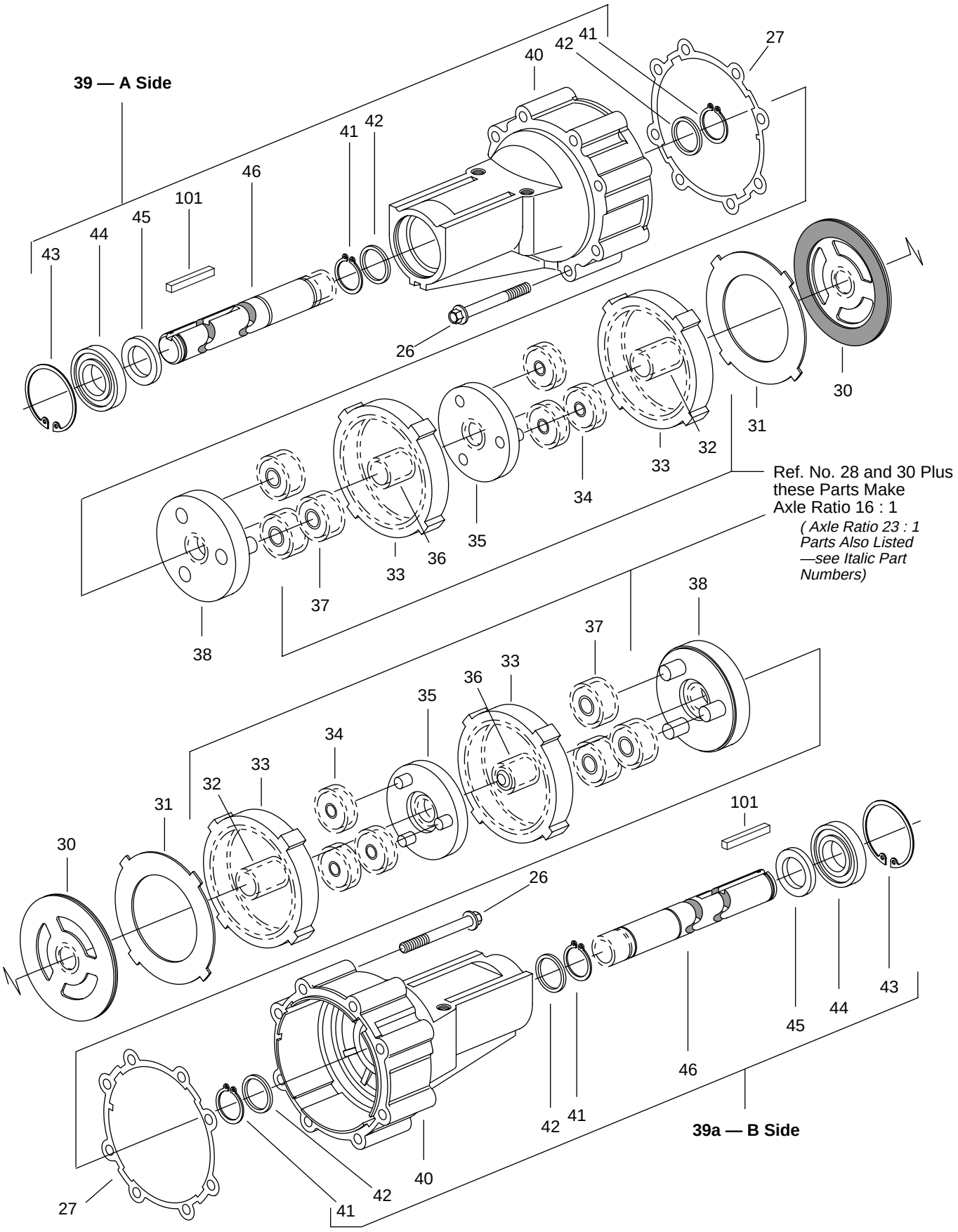
39 — A Side
43
44
45
101
46
41
42
40
41
42
27
26
30
31
32
33
34
35
36
33
37
38
Ref. No. 28 and 30 Plus these Parts Make Axle Ratio 16 : 1
(Axle Ratio 23 : 1 Parts Also Listed —see Italic Part Numbers)
38
37
33
36
35
34
33
32
31
30
26
101
43
44
45
46
42
41
39a — B Side
40
42
41
27

Page 3 Duplicated

Ref. No.	Part Number	Description	Qty.
1	104436-100	Screw, 1/4-20 Self Tap	13
2	106071	Cover (S/A)	1
3	101680-156	Ring, Retaining, Internal	1
4	106073	Shaft, Input (S/A)	1
5	93955	Seal, Input Shaft	1
6	93895	Seal, Control Shaft	1
7	106070	Cover	1
8	105327	Gasket, Cover	1
9	101597	Button	2
10	104107	Drive	1
11	105228	Pump Rotor/Ball (S/A)	1
	104415	Pump Rotor/Ball/Pin (S/A)	1
12	105813	Cam Ring (S/A)	1
13	103621	Insert	1
14	103611	Control Shaft, External Thrd.	1
14a	104935	Control Shaft, Internal Thrd.	1
15	***	Housing (S/A)	1
16	103757-088	Screw, 1/4-20 Hex Flange	5
17	106201	Cover, Valve	1
17a	106385	Port Plate (Horiz. Mount)	1
18	106202	Filter (Internal)	1
19	106200	Gasket	1
20	106008	Plug/Seal (S/A) **No Dump V**	1
	8785-010	Seal, O-ring	1
20a		**Dump Valve Parts**	1
21	104664	Nut, Dump Valve Fitting	1
22	8785-010	Seal, O-ring	1
23	104684	Spring, Dump Valve	1
24	105660	Bracket, Dump Valve	1
25	8761-013	Seal, O-ring	1
26	103757-225	Screw 5/16 Hex Flange	16
27	106129	Gasket, Axle Housing	2
28	104073	18T Motor Rotor/Ball (S/A)	2
	104551	*15T Motor Rotor/Ball (S/A)*	*2*
29	110185	Pad, Friction	2
29a	110186	Spacer	2
30	106413	18T Plate, Reaction	2
	106414	*15T Plate, Reaction*	*2*
31	106104	Plate, Backup	2
32	104339	18T Sun Gear, First	2
	104338	*15T Sun Gear, First*	*2*
33	106124	Gear, Ring 54T	4
	106027	*Gear, Ring 57T*	*4*
34	106151	18T Planet Gear (S/A) First	6
	106167	*21T Planet Gear (S/A) First*	*6*

*** See Chart on Page 6 — Housing (S/A)

Ref. No.	Part Number	Description	Qty.
35	106157	18T Primary Carrier (S/A)	2
	106174	*15T Primary Carrier (S/A)*	*2*
36	104813	18T Sun Gear, Second	2
	104812	*15T Sun Gear, Second*	*2*
37	106159	18T Plnt Gear (S/A) Second	6
	106169	*21T Plnt Gear (S/A) Second*	*6*
38	106137	Secondary Carrier (S/A)	2
39	106178-000	**Axle Housing (S/A) A-Side**	1
39a	106178-000	**Axle Housing (S/A) B-Side**	1
	106190**	Magnet (S/A)	2
40	106162	Housing, Axle	2
41	103983-098	Ring, Retaining, External	4
42	103966	Thrust Washer	4
43	101680-206	Ring, Retaining, Internal	2
44	104928	Bearing, Ball	2
45	103960	Seal, Radial Lip	2
46	106177-000	Shaft, Axle — A-Side	1
	106177-000	Shaft, Axle — B-Side	1
47	106285	.625 Str. Fitting/O-ring (S/A)	A/R
48	106631	.375 Str. Fitting/O-ring (S/A)	A/R
49	105636	.375 90° Fitting/O-ring (S/A)	A/R
50	106008	Plug/O-ring (S/A)	A/R
	8785-010	O-ring for Fittings (47-50)	A/R
51	8771-130	Seal, Square Cut	1
52	101264	Adapter, 7/8-14 O-ring Port	1
53	***	**Piston, Dampening**	
	104962	Piston (S/A)	2
	105814*	Piston (S/A)	2
54		**Brake Lever Parts**	
A	106450	Quad Seal	2
B	106079	Rod, Push	2
C	106437-000	E-Ring	4
D	106784	Spring Base (S/A)	2
E	106078	Spring, Conical	2
F	106261	Shaft, Brake	1
G	16032-406P	Screw, Cap, Hex	1
H	106128-001	Lever, Brake RH	1
I	106128-002	Lever, Brake LH	1
J	106144-XXX	Shim	A/R
K	16188-4	Nut, Hex, Lock	1
101	104167-000	Square Key (Straight Shaft)	2

*Piston, Dampening (S/A) - Wide Band Neutral - Not Shown (has orifice hole through center).

A/R - as Required (S/A) - Sub Assembly

**Magnet (S/A) - Not Shown (Removal Not Recommended)

Series 751

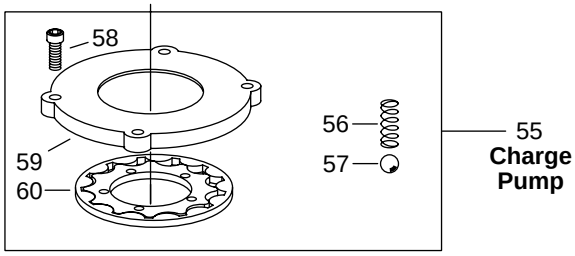

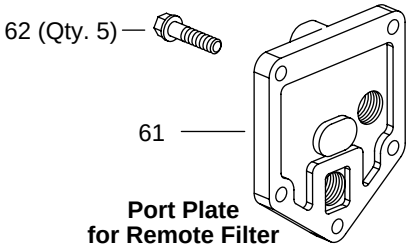

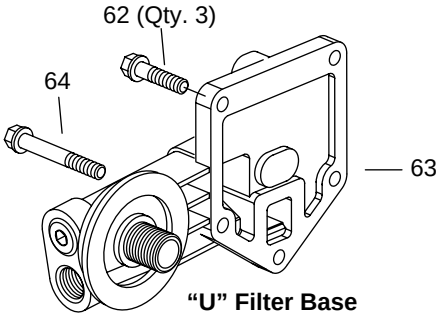

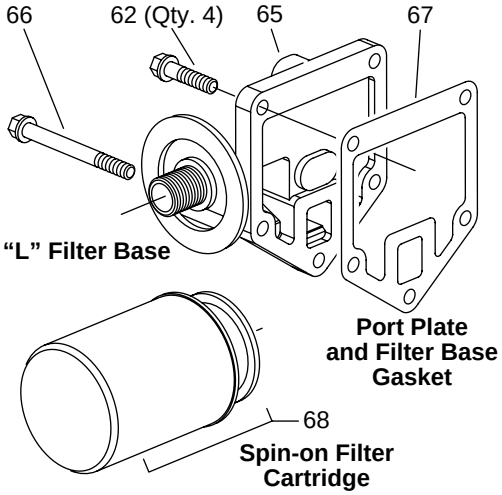

Ref. No.	Part Number	Description	Qty.
55	***	Charge Pump	1
56	104421	Spring	1
57	95881-038	Ball	1
58	101676-088	Screw, Cap, Socket	4
59	104467	Plate, Pump (Class ll)	1
60	104466	Gerotor (Class ll)	1
59 and 60	104701	Plate, Pump and Gerotor (High Pressure)	1
61	104531	Plate, Port	1
62	103757-088	Screw, 1/4-20 Hex Flange	A/R
63	104382	Filter Base "U"	1
	104384	Filter Base "U" w/Ports (2)	1
64	103757-250	Screw, 1/4 20 Hex Flange	2
65	104386	Filter Base "L"	1
66	103757-375	Screw, 1/4-20 Hex Flange	1
67	104392	Gasket	1
68	103144	Filter	1

*** See Chart Below — Housing (S/A)

Reference Number 15 Housing (S/A)

		No Wide Band Neutral (53)			Wide Band Neutral (53)		
		No Charge Pump	Charge Pump* (55)	High Press. Charge Pump	No Charge Pump	Charge Pump* (55)	High Press. Charge Pump
CW	Standard	106138	106179	106209	106298	106304	106705
	Special	—	—	—	—	—	—
CCW	Standard	—	106208	106584	—	—	—
	Special	106226	—	—	—	—	—

* Class ll

Series 751

How to Order Replacement Parts

Each Order Must Include the Following:

1. Product Number
2. Date Code
3. Part Name
4. Part Number
5. Quantity of Parts

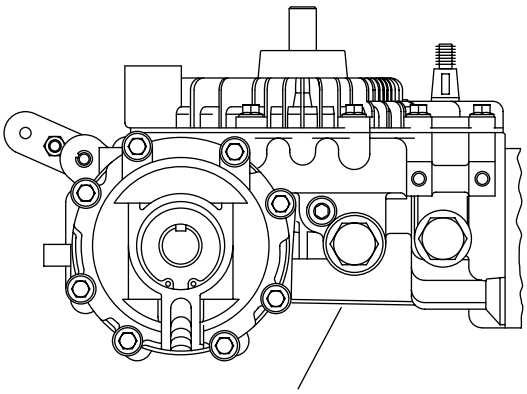

Part Number, Date of Assembly, and Input Rotation Stamped on this Surface

Assembly Part Number

Input Rotation (CW or CCW)

Date of Build Code

XXX-XXX XXX XXXXXX

Customer Part Number (if Required) — XXXXXX

XX/XX/XX 11

Factory Rebuild Code

Original Build (example - 010191)

01 01 91

Year

Day

Month

Factory Rebuild (example - 01/01/91 11)

01 01 91 11

Number of Times Rebuilt (2)

Year

Day

Month

Eaton
Fluid Power Group
Hydraulics Business USA
14615 Lone Oak Road
Eden Prairie, MN 55344
USA
Tel: 952-937-9800
Fax: 952-294-7722
www.eaton.com/hydraulics

Eaton
Fluid Power Group
Hydraulics Business Europe
Route de la Longeraie 7
1110 Morges
Switzerland
Tel: +41 (0) 21 811 4600
Fax: +41 (0) 21 811 4601

Eaton
Fluid Power Group
Hydraulics Business Asia Pacific
11th Floor Hong Kong New World Tower
300 Huaihai Zhong Road
Shanghai 200021
China
Tel: 86-21-6387-9988
Fax: 86-21-6335-3912

Powering Business Worldwide

© 2008 Eaton Corporation
All Rights Reserved
Printed in USA
Document No. E-TRLD-TP003-E
Supersedes 06-425
January 2009