Eaton®
Hydrostatic Transaxle

May, 1999

Parts Information

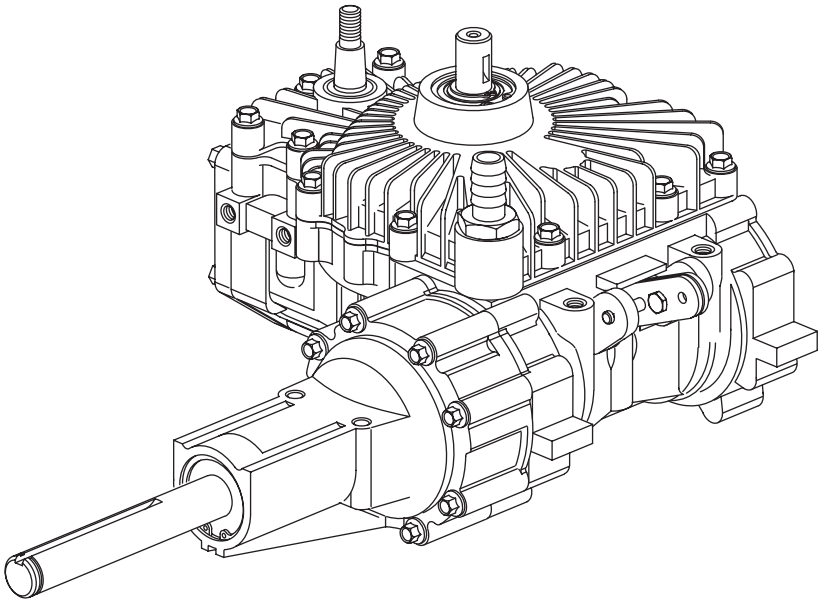

Transaxle Series 771 — A Side

Series 771 — A Side

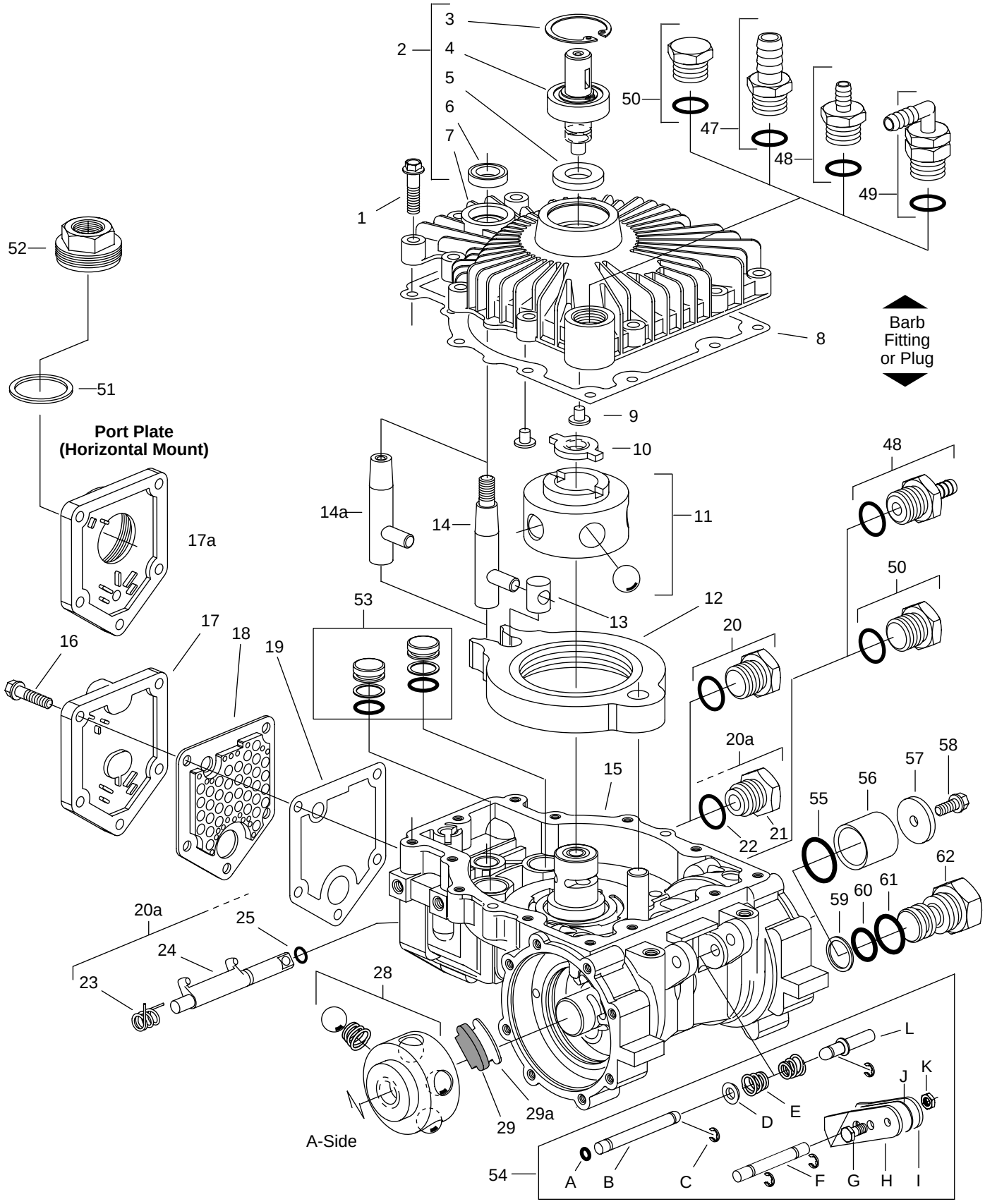

Series 771 — A Side

Ref. No.	Part Number	Description	Qty.
1	104436-100	Screw, 1/4-20 Self Tap	13
2	106071	Cover (S/A)	1
3	101680-156	Ring, Retaining, Internal	1
4	106073	Shaft, Input (S/A)	1
5	93955	Seal, Input Shaft	1
6	93895	Seal, Control Shaft	1
7	106070	Cover	1
8	105327	Gasket, Cover	1
9	101597	Button	2
10	104107	Drive	1
11	105228	Pump Rotor/Ball (S/A)	1
	104415	Pump Rotor/Ball/Pin (S/A)	1
12	105813	Cam Ring (S/A)	1
13	103621	Insert	1
14	103611	Control Shaft, External Thrd.	1
14a	104935	Control Shaft, Internal Thrd.	1
15	N/A	Housing (S/A) w/parts 57-60	1
	***	Housing (S/A) w/parts 61-63	1
16	103757-088	Screw, 1/4-20 Hex Flange	5
17	106201	Cover, Valve	1
17a	106385	Port Plate (Horiz. Mount)	1
18	106202	Filter (Internal)	1
19	106200	Gasket, V Cover/P Plate	1
20	106008	Plug/Seal (S/A) **No Dump V**	1
	8785-010	Seal, O-ring	1
20a		**Dump Valve Parts**	1
21	104664	Nut, Dump Valve Fitting	1
22	8785-010	Seal, O-ring	1
23	104684	Spring, Dump Valve	1
24	105660	Bracket, Dump Valve	1
25	8761-013	Seal, O-ring	1
26	103757-225	Screw 5/16 Hex Flange	8
27	106129	Gasket, Axle Housing	1
28	104551	15T Motor Rotor/Ball (S/A)	1
29	110185	Pad, Friction	1
29a	110186	Spacer	1
30	106414	Plate, Reaction	1
31	106104	Plate, Backup	1
32	104338	15T Sun Gear, First	1
33	106027	Gear, Ring 57T	2
34	106167	21T Planet Gear (S/A) First	3
35	106174	15T Primary Carrier (S/A)	1
36	104812	15T Sun Gear, Second	1
	104984	15T Sun Gear, 2nd (Steel)	1

Ref. No.	Part Number	Description	Qty.
37	106169	21T Plnt Gear (S/A) Second	3
	106204	21T Plnt Gear(S/A)2nd Steel	3
38	106137	Secondary Carrier (S/A)	1
39	106178-000	**Axle Housing (S/A) A-Side**	1
	106190**	Magnet (S/A)	1
40	106162	Housing, Axle	1
41	103983-098	Ring, Retaining, External	2
42	103966	Thrust Washer	2
43	101680-206	Ring, Retaining, Internal	1
44	104928	Bearing, Ball	1
45	103960	Seal, Radial Lip	1
46	106177-000	Shaft, Axle — A-Side	1
47	106285	.625 Str. Fitting/O-ring (S/A)	A/R
48	106631	.375 Str. Fitting/O-ring (S/A)	A/R
49	105636	.375 90° Fitting/O-ring (S/A)	A/R
50	106008	Plug/O-ring (S/A)	A/R
	8785-010	O-ring for Fittings (47-50)	A/R
51	8771-130	Seal, Square Cut	1
52	101264	Adapter, 7/8-14 O-ring Port	1
53	***	**Piston, Dampening**	
	104962	Piston (S/A)	2
	105814*	Piston (S/A)	2
54		**Brake Lever Parts**	
A	106450	Quad Seal	1
B	106079	Rod, Push	1
C	106437-000	E-Ring	4
D	106784	Spring Base (S/A)	1
E	106078	Spring, Conical	2
F	106261	Shaft, Brake	1
G	16032-406P	Screw, Cap, Hex	1
H	106128-001	Lever, Brake RH	1
I	106128-002	Lever, Brake LH	1
J	106144-XXX	Shim	A/R
K	16188-4	Nut, Hex, Lock	1
L	106390	Stop	1
101	104167-000	Square Key (Straight Shaft)	1

*Piston, Dampening (S/A) - Wide Band Neutral — Not Shown (has orifice hole through center).

A/R - as Required (S/A) - Sub Assy. (N/A) - Not Available

**Magnet (S/A) - Not Shown (Removal Not Recommended)

*** See Chart on Page 6 — Housing (S/A)

Series 771 — A Side

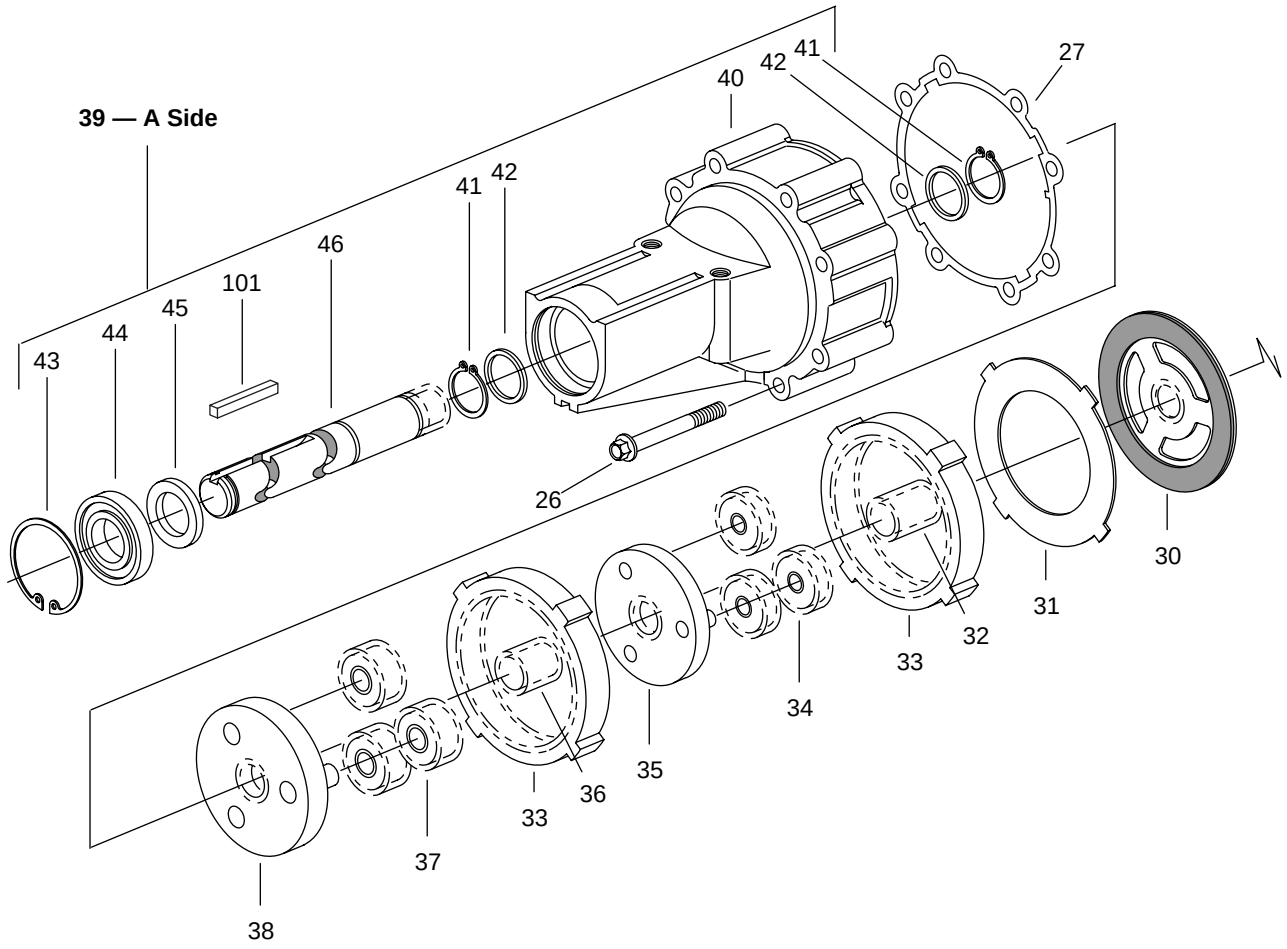

Page 3 Duplicated (Series 771 — A Side)

Ref. No.	Part Number	Description	Qty.
1	104436-100	Screw, 1/4-20 Self Tap	13
2	106071	Cover (S/A)	1
3	101680-156	Ring, Retaining, Internal	1
4	106073	Shaft, Input (S/A)	1
5	93955	Seal, Input Shaft	1
6	93895	Seal, Control Shaft	1
7	106070	Cover	1
8	105327	Gasket, Cover	1
9	101597	Button	2
10	104107	Drive	1
11	105228	Pump Rotor/Ball (S/A)	1
	104415	Pump Rotor/Ball/Pin (S/A)	1
12	105813	Cam Ring (S/A)	1
13	103621	Insert	1
14	103611	Control Shaft, External Thrd.	1
14a	104935	Control Shaft, Internal Thrd.	1
15	N/A	Housing (S/A) w/parts 57-60	1
	***	Housing (S/A) w/parts 61-63	1
16	103757-088	Screw, 1/4-20 Hex Flange	5
17	106201	Cover, Valve	1
17a	106385	Port Plate (Horiz. Mount)	1
18	106202	Filter (Internal)	1
19	106200	Gasket, V Cover/P Plate	1
20	106008	Plug/Seal (S/A) **No Dump V**	1
	8785-010	Seal, O-ring	1
20a		**Dump Valve Parts**	1
21	104664	Nut, Dump Valve Fitting	1
22	8785-010	Seal, O-ring	1
23	104684	Spring, Dump Valve	1
24	105660	Bracket, Dump Valve	1
25	8761-013	Seal, O-ring	1
26	103757-225	Screw 5/16 Hex Flange	8
27	106129	Gasket, Axle Housing	1
28	104551	15T Motor Rotor/Ball (S/A)	1
29	110185	Pad, Friction	1
29a	110186	Spacer	1
30	106414	Plate, Reaction	1
31	106104	Plate, Backup	1
32	104338	15T Sun Gear, First	1
33	106027	Gear, Ring 57T	2
34	106167	21T Planet Gear (S/A) First	3
35	106174	15T Primary Carrier (S/A)	1
36	104812	15T Sun Gear, Second	1
	104984	15T Sun Gear, 2nd (Steel)	1

Ref. No.	Part Number	Description	Qty.
37	106169	21T Plnt Gear (S/A) Second	3
	106204	21T Plnt Gear(S/A)2nd Steel	3
38	106137	Secondary Carrier (S/A)	1
39	106178-000	**Axle Housing (S/A) A-Side**	1
	106190**	Magnet (S/A)	1
40	106162	Housing, Axle	1
41	103983-098	Ring, Retaining, External	2
42	103966	Thrust Washer	2
43	101680-206	Ring, Retaining, Internal	1
44	104928	Bearing, Ball	1
45	103960	Seal, Radial Lip	1
46	106177-000	Shaft, Axle — A-Side	1
47	106285	.625 Str. Fitting/O-ring (S/A)	A/R
48	106631	.375 Str. Fitting/O-ring (S/A)	A/R
49	105636	.375 90° Fitting/O-ring (S/A)	A/R
50	106008	Plug/O-ring (S/A)	A/R
	8785-010	O-ring for Fittings (47-50)	A/R
51	8771-130	Seal, Square Cut	1
52	101264	Adapter, 7/8-14 O-ring Port	1
53	***	**Piston, Dampening**	
	104962	Piston (S/A)	2
	105814*	Piston (S/A)	2
54		**Brake Lever Parts**	
A	106450	Quad Seal	1
B	106079	Rod, Push	1
C	106437-000	E-Ring	4
D	106784	Spring Base (S/A)	1
E	106078	Spring, Conical	2
F	106261	Shaft, Brake	1
G	16032-406P	Screw, Cap, Hex	1
H	106128-001	Lever, Brake RH	1
I	106128-002	Lever, Brake LH	1
J	106144-XXX	Shim	A/R
K	16188-4	Nut, Hex, Lock	1
L	106390	Stop	1
101	104167-000	Square Key (Straight Shaft)	1

*Piston, Dampening (S/A) - Wide Band Neutral — Not Shown (has orifice hole through center).

A/R - as Required (S/A) - Sub Assy. (N/A) - Not Available

**Magnet (S/A) - Not Shown (Removal Not Recommended)

*** See Chart on Page 6 — Housing (S/A)

Series 771 — A Side

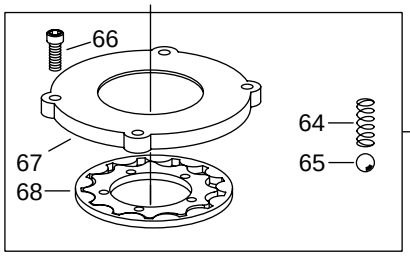

Continued from page list on page 4.

Ref. No.	Part Number	Description	Current Housings: First Housings Qty.	Current Housings Qty.
55	8761-121	Seal, O-ring	1	
56	104989	Cup, Seal	1	
57	104988	Washer	1	
58	103757-088	Screw, Hex, Flange	1	
59	8770-211	Ring, Backup		1
60	8765-211	Seal, O-ring		1
61	8785-014	Seal, O-ring		1
62	106505	Plug		1

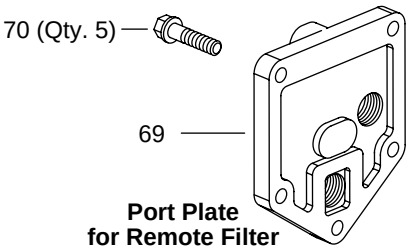

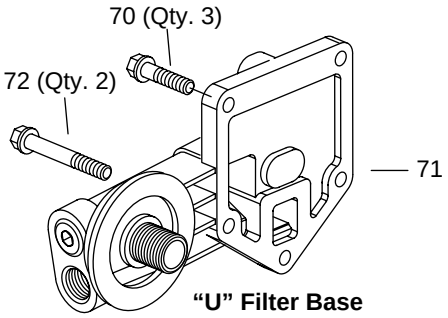

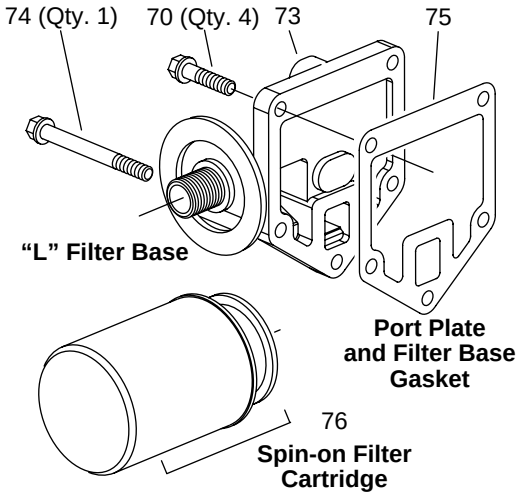

Ref. No.	Part Number	Description	Qty.
63	***	Charge Pump	1
64	104421	Spring	1
65	195881-038	Ball	1
66	101676-088	Screw, Cap, Socket	4
67	104467	Plate, Pump (Class ll)	1
68	104466	Gerotor (Class ll)	1
67 and 68	104701	Plate, Pump and Gerotor (High Pressure)	1
69	104531	Plate, Port	1
70	103757-088	Screw, 1/4-20 Hex Flange	A/R
71	104382	Filter Base "U"	1
	104384	Filter Base "U" w/Ports (2)	1
72	103757-250	Screw, 1/4 20 Hex Flange	2
73	104386	Filter Base "L"	1
74	103757-375	Screw, 1/4-20 Hex Flange	1
75	104392	Gasket	1
76	103144	Filter	1

*** See Chart Below — Housing (S/A)

Reference Number 15 Housing (other parts included in S/A are 59-62)							
		No Wide Band Neutral (Ref. No. 53)			Wide Band Neutral (Ref. No. 53)		
		No Charge Pump	Charge Pump* (63)	High Press. Charge Pump	No Charge Pump	Charge Pump* (63)	High Press. Charge Pump
CW	Standard	106971	—	—	106730	—	—
	Special	—	106449	—	—	—	—
CCW	Standard	—	—	—	—	—	—
	Special	106585	106227	—	—	—	—

* Class ll

Series 771 — A Side

HOW TO ORDER REPLACEMENT PARTS

EACH ORDER MUST INCLUDE THE FOLLOWING:

1. Product Number
2. Date Code
3. Part Name
4. Part Number
5. Quantity of Parts

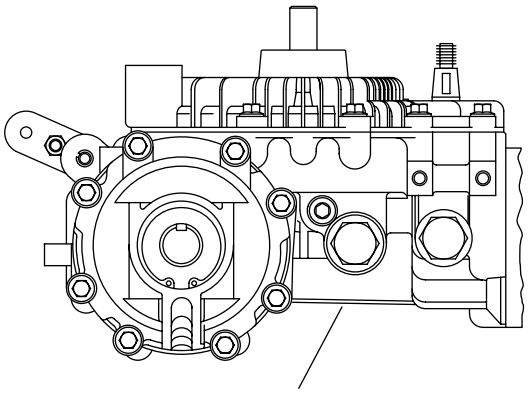

Part Number, Date of Assembly, and Input Rotation Stamped on this Surface

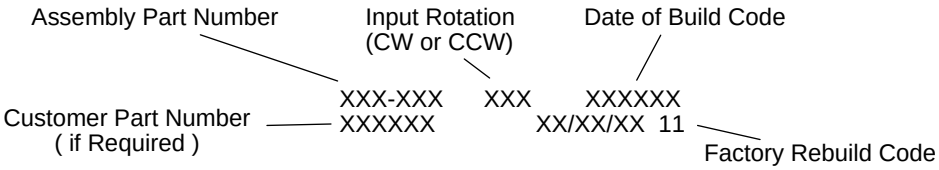

Original Build (example - 010191)

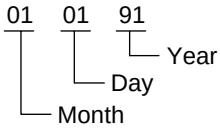

Factory Rebuild (example - 01/01/91 11)

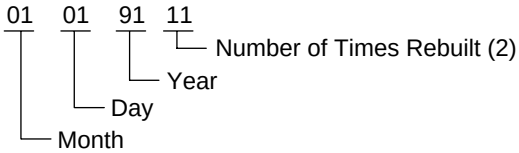

Eaton
Fluid Power Group
Hydraulics Business USA
14615 Lone Oak Road
Eden Prairie, MN 55344
USA
Tel: 952-937-9800
Fax: 952-294-7722
www.eaton.com/hydraulics

Eaton
Fluid Power Group
Hydraulics Business Europe
Route de la Longeraie 7
1110 Morges
Switzerland
Tel: +41 (0) 21 811 4600
Fax: +41 (0) 21 811 4601

Eaton
Fluid Power Group
Hydraulics Business Asia Pacific
11th Floor Hong Kong New World Tower
300 Huaihai Zhong Road
Shanghai 200021
China
Tel: 86-21-6387-9988
Fax: 86-21-6335-3912

Powering Business Worldwide

© 2008 Eaton Corporation
All Rights Reserved
Printed in USA
Document No. E-TRLD-TP005-E
Supersedes 06-427
January 2009