Service Bulletin

Eaton®
Transaxles

May, 2000

To: Eaton Transaxle Distributors

Subject: Discontinued— Transaxles 750, 850, 780, and 770

The early Transaxles 750, 850, 780, and 770 had been in production from 1988 to 1991. Replacement parts on these units are no longer available. Transaxles 751, 851, 781 and 771 are available as replacement units. However, these units will not bolt on without some modifications.

Some of the differences are:

- Input shaft diameter is 17mm not 3/4 inch.
- Parking brake linkage connections and actuation angles differ.
- Differential lock is no longer an available option.
- Axle mounting points are similar but mounting hole modifications are required.

Reservoir connections, control shaft and axle diameters are common between the old units and the replacement transaxles.

Eaton Hydraulics Catalog 11-888 for 751, 851, 781 and 771 Transaxle includes specifications, dimensions, axle shaft detail, model code, expansion tank or reservoir options plus sources for complementary components.

This catalog can be seen and printed from the www.eatonhydraulics.com website http://www.eatonhydraulics.com/products/pdfs/trans/11-888.pdf or catalogs can be ordered from Wallace Printing (telephone number 877 272-1293).

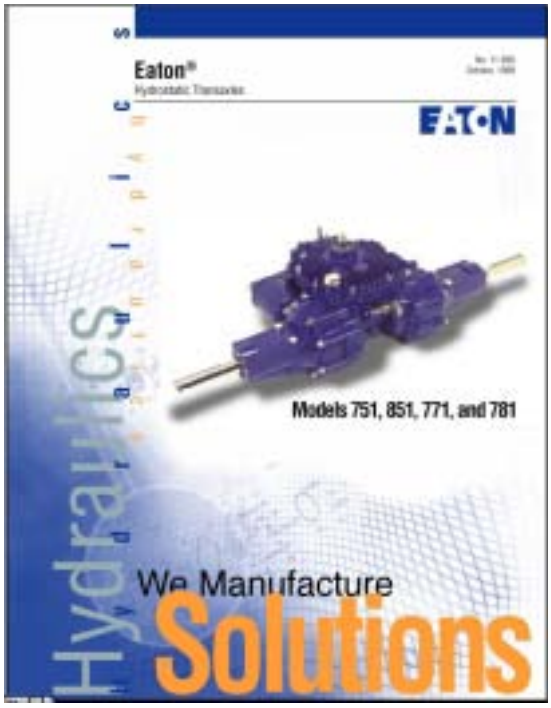

Discontinued and Replacement Transmission — Some Rework Required

750 Transaxle
(Discontinued)

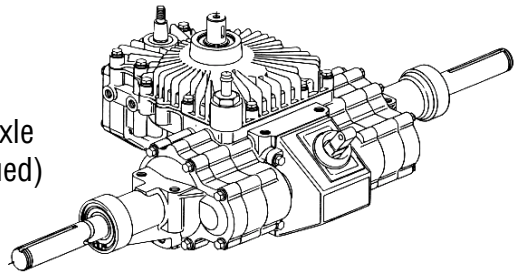

751 Transaxle
(Replacement)

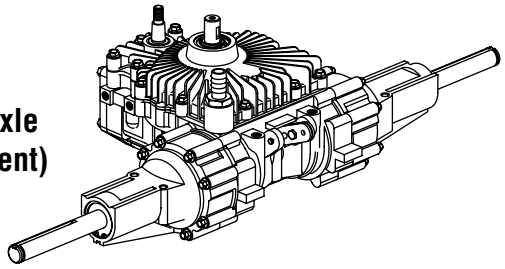

Transaxle Cross-Reference

750 Series	750 Series (August 1990)	**751 Series**
3/4 Inch Input	17mm Input	**17mm Input**
750-017	750-033	**751-052**
750-018	750-033	**751-052**
750-019	750-032	**751-042**
	750-035	**751-046**
	750-034	**751-045**

850 Transaxle
(Discontinued)

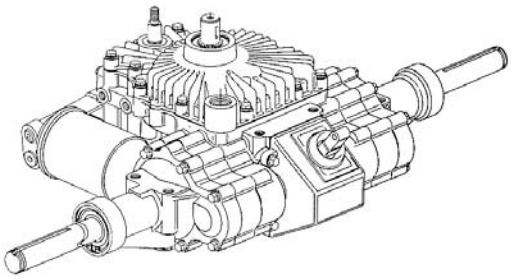

851 Transaxle
(Replacement)

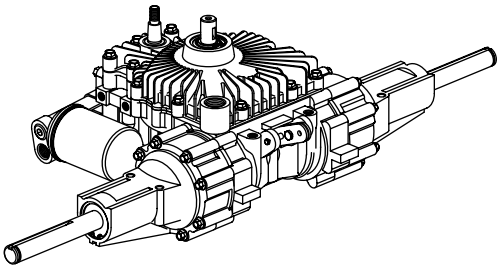

Transaxle Cross-Reference

850 Series	850 Series (August 1990)	**851 Series**
3/4 Inch Input	17mm Input	**17mm Input**
850-000	850-037	**851-065**
850-002	850-038	**851-093**
850-003	850-039	**851-097**
850-007	850-043	**851-096**
850-011	850-047	**851-098**
850-014	850-050	**851-102**
850-019	850-055	**851-088**
850-020	850-056	**851-089**
850-023	850-059	**851-108**
850-026	850-062	**851-105**
850-030	850-066	**851-106**
850-031	850-067	**851-090**
850-034	850-070	**851-095**
	850-073	**851-092**
	850-075	**851-094**
	850-077	**851-095**
	850-078	**851-086**
	850-080	**851-091**

Discontinued and Replacement Transmission — Some Rework Required

770 Transaxle
(Discontinued)

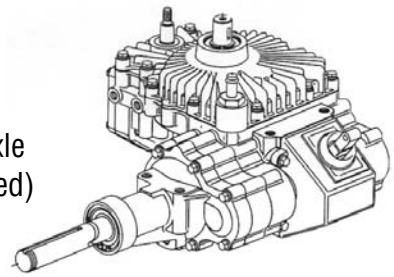

771 Transaxle
(Replacement)

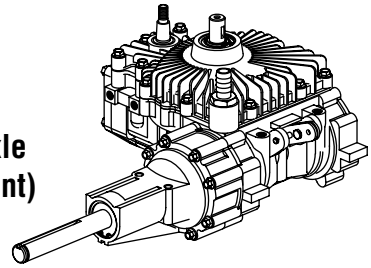

Transaxle Cross-Reference

770 Series	770 Series (August 1990)	**771 Series**
3/4 Inch Input	17mm Input	**17mm Input**
770-000	770-012	**771-034**
770-001	770-013	**771-035**
770-002	770-014	**771-036**
770-003	770-015	**771-036**
770-008	770-020	**771-034**
770-009	770-021	**771-035**
770-010	770-022	**771-044**
770-011	770-023	**771-045**
	770-026	**771-036**
	770-027	**771-037**
	850-028	**771-040**
	850-029	**771-041**

780 Transaxle
(Discontinued)

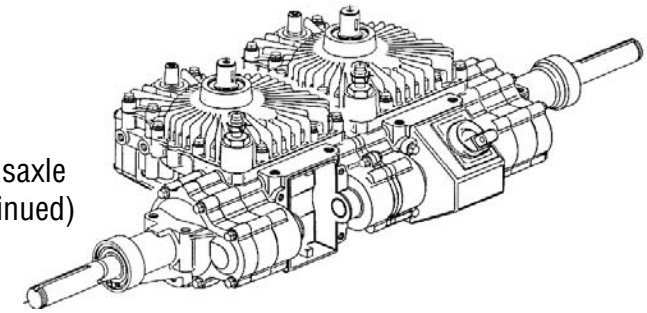

781 Transaxle
(Replacement)

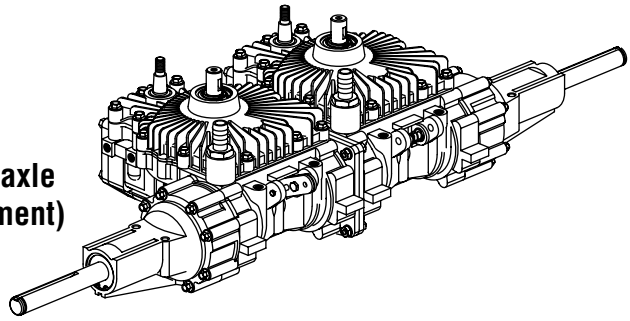

Transaxle Cross-Reference

780 Series	780 Series (August 1990)	**781 Series**
3/4 Inch Input	17mm Input	**17mm Input**
780-002	780-007	**781-018**
780-003	780-008	**781-015** **781-016**

Eaton
Fluid Power Group
Hydraulics Group USA
14615 Lone Oak Road
Eden Prairie, MN 55344
USA
Tel: 952-937-9800
Fax: 952-294-7722
www.eaton.com/hydraulics

Eaton
Fluid Power Group
Hydraulics Group Europe
Route de la Longeraie 7
1110 Morges
Switzerland
Tel: +41 (0) 21 811 4600
Fax: +41 (0) 21 811 4601

Eaton
Fluid Power Group
Hydraulics Group Asia Pacific
11th Floor Hong Kong New World Tower
300 Huaihai Zhong Road
Shanghai 200021
China
Tel: 86-21-6387-9988
Fax: 86-21-6335-3912

Powering Business Worldwide

© 2009 Eaton Corporation
All Rights Reserved
Printed in USA
Document No. E-TRLD-TB005-E
Supersedes SB000501
March 2009