Service Bulletin

December 7, 1989

To: Eaton Light Duty Hydrostatic Distributors and OEM Customers

Subject: Changes to Eaton® Light Duty Hydrostatic Transaxles - Series 750, 850, 770, and 780.

The axle housings on all Light Duty Hydrostatic Transaxles, Series 750, 850, 770, and 780, have been redesigned. The redesigned axle housings no longer require the thrust washer or spacer, see drawing below.

The thrust washers, spacers, and old style axle housings are no longer available. If any of these parts need to be replaced you must Install the new style axle housing.

This change became effective July 1, 1989. Units manufactured after the change will have a date code of G01J or higher. The parts lists for these transaxles (form numbers 6-412, 6-413, 6-416, and 6-417) have been revised and are dated November, 1989.

Note: The axle Housings for both horizontal and vertical input transaxles have been redesigned.

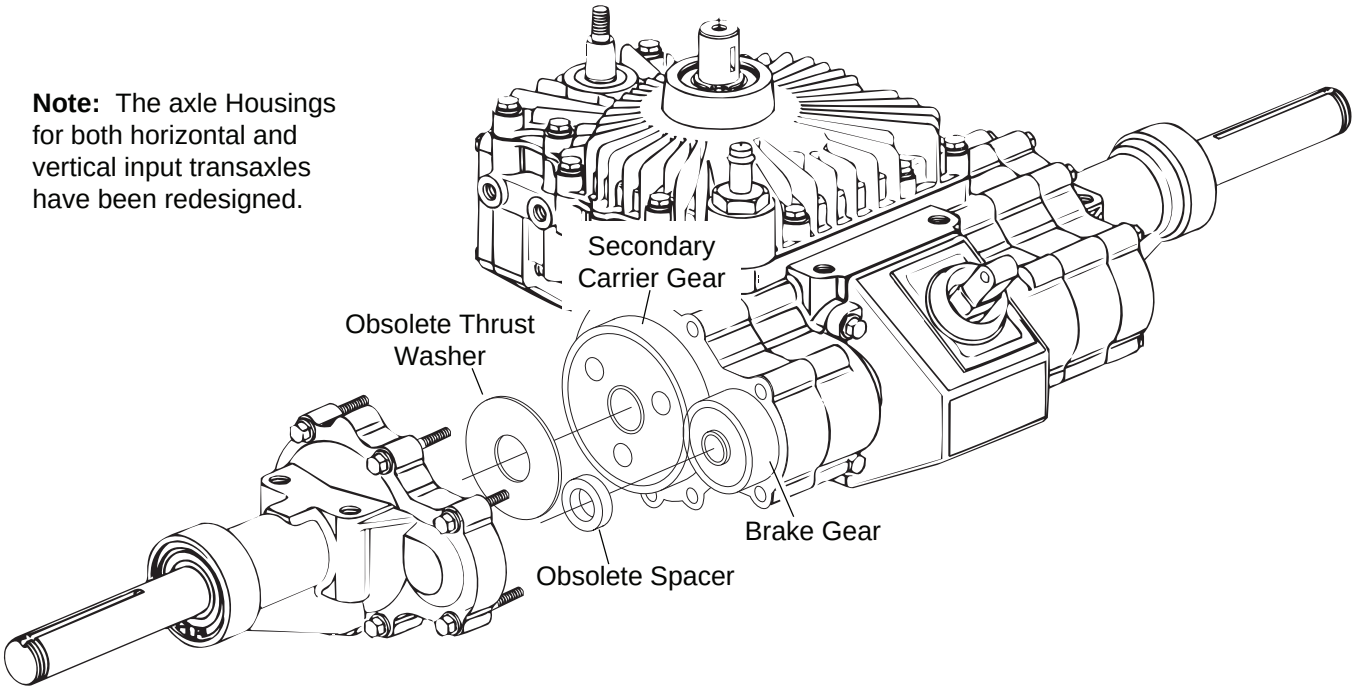

Chuck Peters
Service Manager

Eaton
Fluid Power Group
Hydraulics Business USA
14615 Lone Oak Road
Eden Prairie, MN 55344
USA
Tel: 952-937-9800
Fax: 952-294-7722
www.eaton.com/hydraulics

Eaton
Fluid Power Group
Hydraulics Business Europe
Route de la Longeraie 7
1110 Morges
Switzerland
Tel: +41 (0) 21 811 4600
Fax: +41 (0) 21 811 4601

Eaton
Fluid Power Group
Hydraulics Business Asia Pacific
11th Floor Hong Kong New World Tower
300 Huaihai Zhong Road
Shanghai 200021
China
Tel: 86-21-6387-9988
Fax: 86-21-6335-3912

Powering Business Worldwide

© 2008 Eaton Corporation
All Rights Reserved
Printed in USA
Document No. E-TRLD-TB002-E
Supersedes 00-SB1231
January 2009