Service Data

Vickers®

Pressure Relief

Pressure Control Valves

R(C)T–03––30**
R(C)S–03––30**

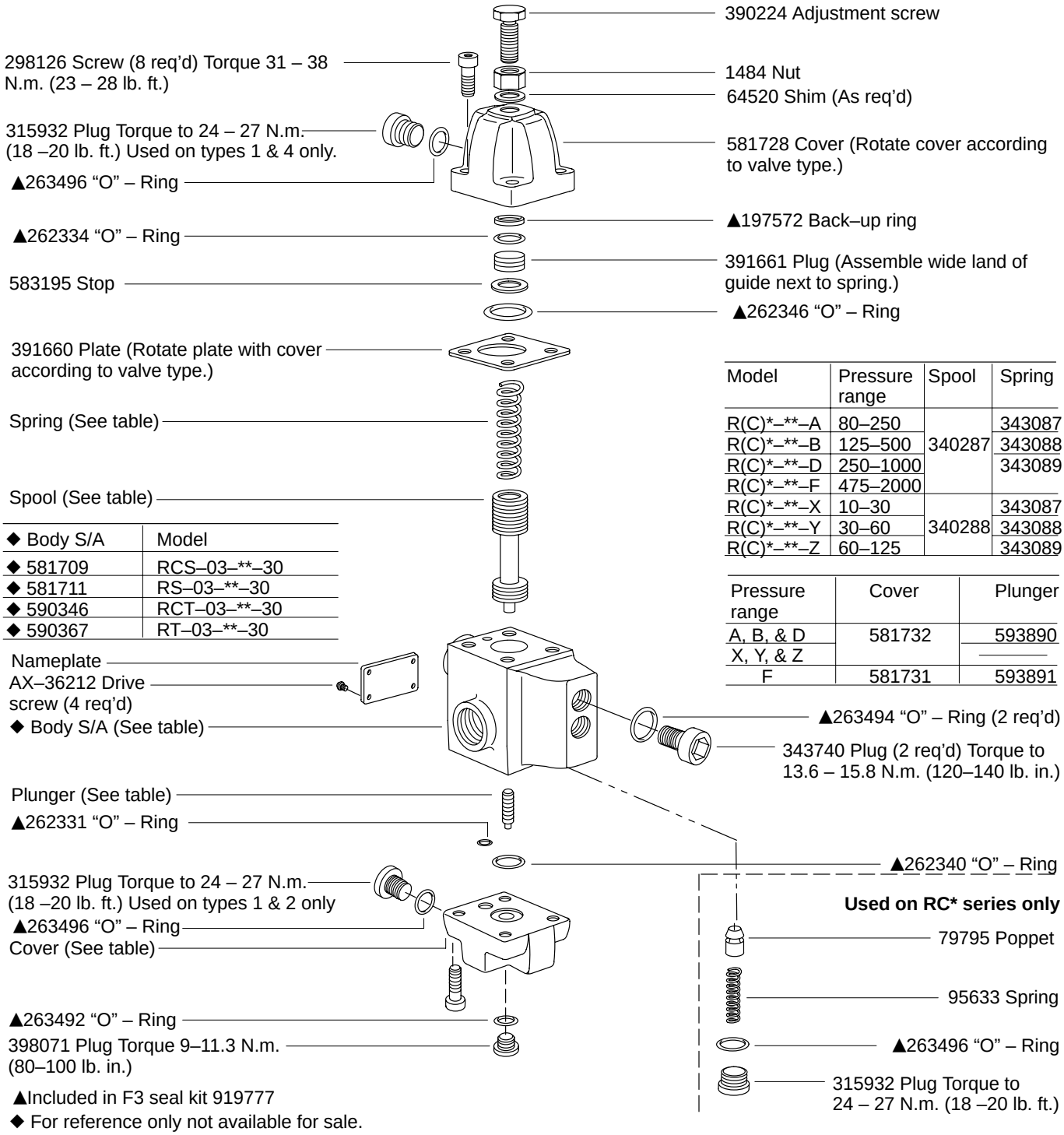

Model	Pressure range	Spool	Spring
R(C)*–**–A	80–250	340287	343087
R(C)*–**–B	125–500		343088
R(C)*–**–D	250–1000		343089
R(C)*–**–F	475–2000		
R(C)*–**–X	10–30	340288	343087
R(C)*–**–Y	30–60		343088
R(C)*–**–Z	60–125		343089

◆ Body S/A	Model
◆ 581709	RCS–03–**–30
◆ 581711	RS–03–**–30
◆ 590346	RCT–03–**–30
◆ 590367	RT–03–**–30

Pressure range	Cover	Plunger
A, B, & D	581732	593890
X, Y, & Z		———
F	581731	593891

▲Included in F3 seal kit 919777
◆ For reference only not available for sale.

VICKERS

Model Code

(F3) - R (C) * - 03 - * * - 30

1 2 3 4 5 6 7 8

1 **Special seals**
(Omit on STD. models.)

2 **Pressure control valve**

3 **Check valve option**

C – With integral check valve (Reverse free flow)
Omit – No check valve

4 **Mounting**

S – .750–16 UNF–2B thread
T – $^3/_8$″ NPTF thread

5 **Connection size**

03 – $^3/_8$″

6 **Pressure range**

A – 80 – 250 PSI
B – 125 – 500 PSI
D – 250 – 1000 PSI
F – 475 – 2000 PSI
X – 10 – 30 PSI
Y – 30 – 60 PSI
Z – 60 – 125 PSI

7 **Valve types**

(Inset views at bottom of page show cover positions for the (4) valve types.)

8 **Design**

Typical model number
RCG–03–D4–30

Note
Assemble covers as shown to obtain valve action desired.

Type 1
RT series – Back pressure valve
RCT series – Counterbalance valve
Directly controlled internal drain

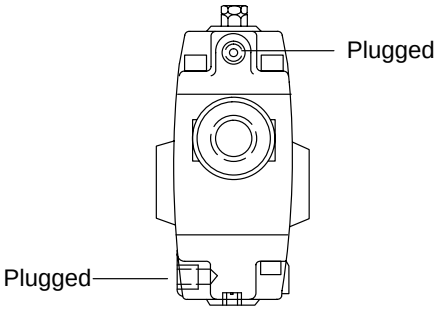

Note
Assemble covers as shown to obtain valve action desired.

Type 2
RT or RCT series – Sequence valves
Directly controlled external drain

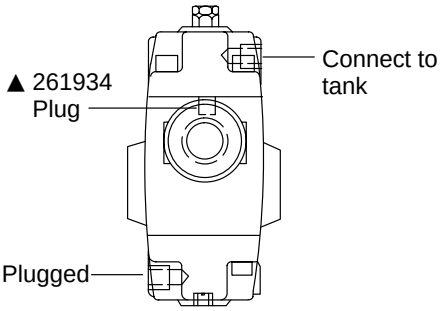

Type 3
RT or RCT series – Sequence valves
Remotely controlled external drain

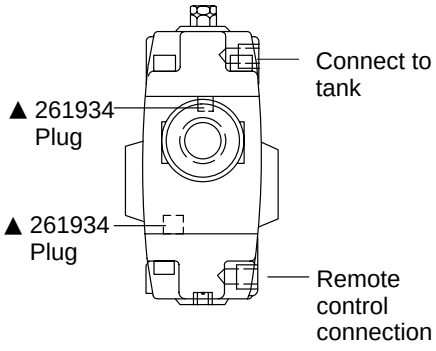

Type 4
RT series – Unloading valve
RCT series – Counterbalance valve
Remotely controlled internal drain

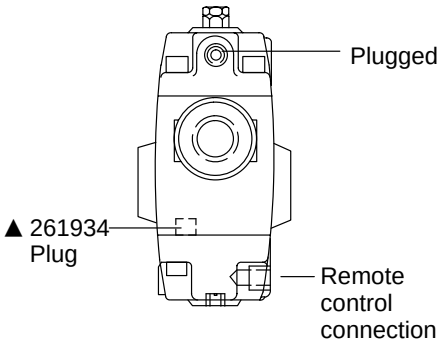

For satisfactory service life of these components, use full flow filtration to provide fluid which meets ISO cleanliness code 16/13 or cleaner. Selections from pressure, return, and in-line filter series are recommended.

© Eaton Hydraulics, Incorporated 2000
All Rights Reserved

Printed in U.S.A.