Pressure Control Valves

R(C)T–06––30**
R(C)S–06––30**

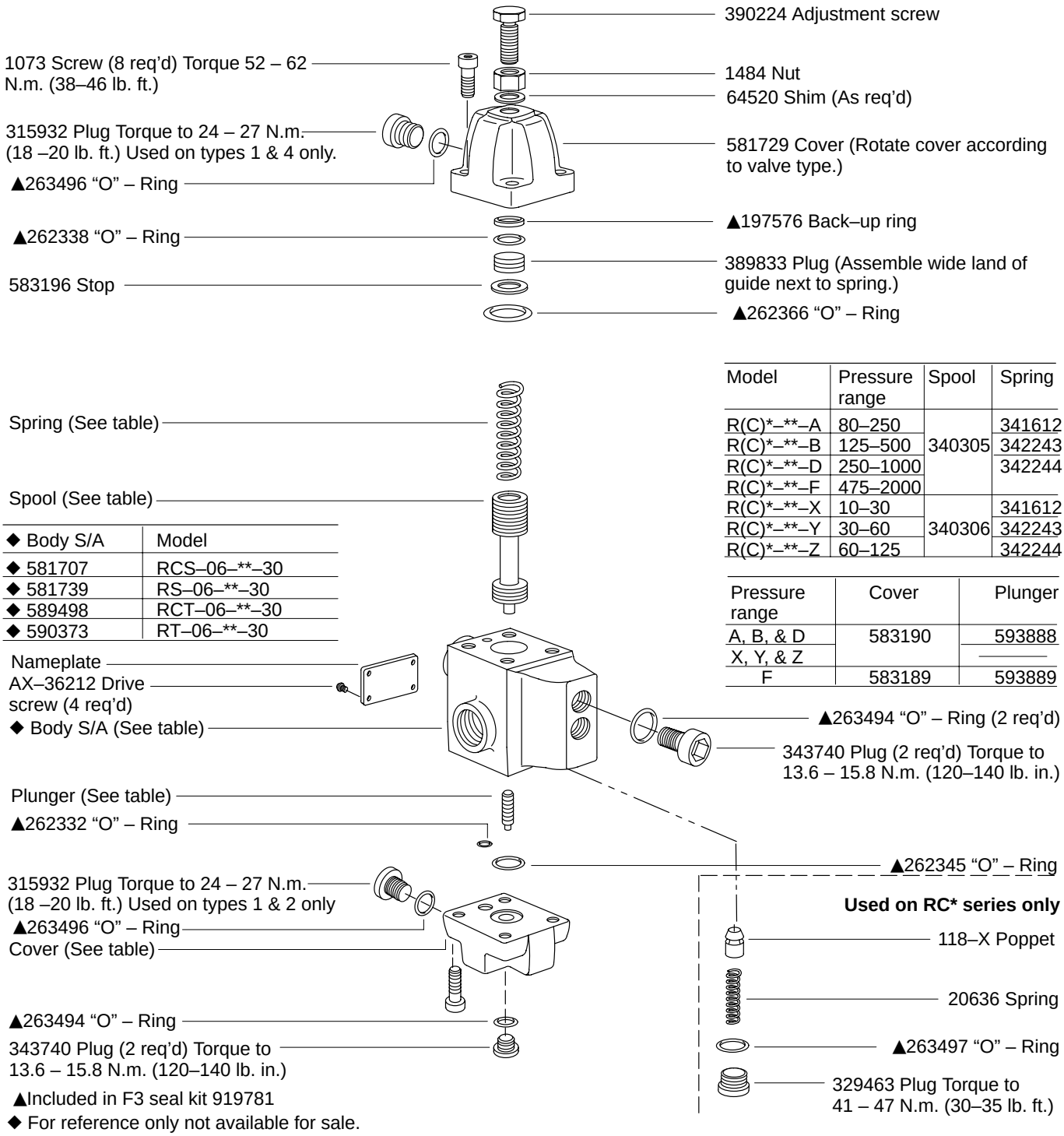

Model	Pressure range	Spool	Spring
R(C)*–**–A	80–250	340305	341612
R(C)*–**–B	125–500		342243
R(C)*–**–D	250–1000		342244
R(C)*–**–F	475–2000		
R(C)*–**–X	10–30	340306	341612
R(C)*–**–Y	30–60		342243
R(C)*–**–Z	60–125		342244

◆ Body S/A	Model
◆ 581707	RCS–06–**–30
◆ 581739	RS–06–**–30
◆ 589498	RCT–06–**–30
◆ 590373	RT–06–**–30

Pressure range	Cover	Plunger
A, B, & D	583190	593888
X, Y, & Z		—
F	583189	593889

▲Included in F3 seal kit 919781
◆ For reference only not available for sale.

Model Code

(F3) - R (C) * - 06 - * * - 30

1 2 3 4 5 6 7 8

1 Special seals
(Omit on STD. models.)

2 Pressure control valve

3 Check valve option

C – With integral check valve (Reverse free flow)
Omit – No check valve

4 Mounting

S – 1.0625–12 UNF–2B thread
T – $^3/_4$″ NPTF thread

5 Connection size

06 – $^3/_4$″ Pipe thread

6 Pressure range

A – 80 – 250 PSI
B – 125 – 500 PSI
D – 250 – 1000 PSI
F – 475 – 2000 PSI
X – 10 – 30 PSI
Y – 30 – 60 PSI
Z – 60 – 125 PSI

7 Valve types

(Inset views at bottom of page show cover positions for the (4) valve types.)

8 Design

Typical model number
RCT–06–D4–30

Note
Assemble covers as shown to obtain valve action desired.

Type 1
RT series – Back pressure valve.
RCT series – Counterbalance valve.
Directly controlled internal drain

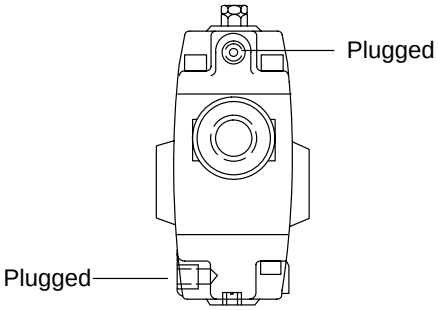

Note
Assemble covers as shown to obtain valve action desired.

Type 2
RT or RCT series – Sequence valves.
Directly controlled external drain

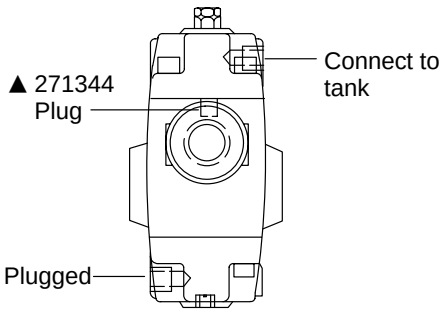

Type 3
RT or RCT series – Sequence valves.
Remotely controlled external drain

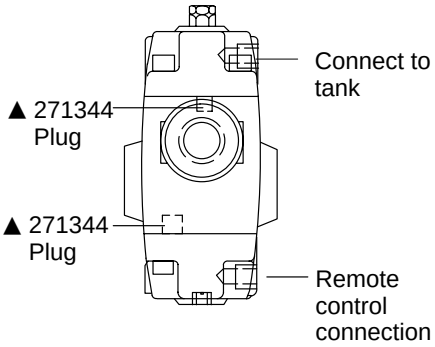

Type 4
RT series – Unloading valve.
RCT series – Counterbalance valve.
Remotely controlled internal drain

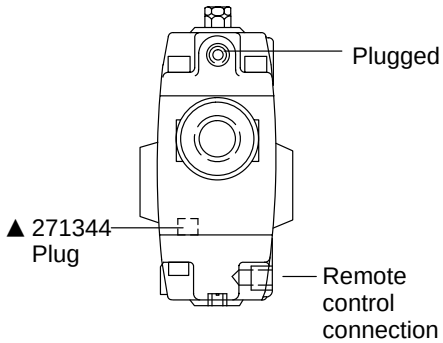

©Eaton Hydraulics, Incorporate 2000,
All Rights Reserved

Printed in U.S.A.