Vickers®

Pressure Relief

Pressure Control Valves

R(C)T–06–*P*–30
R(C)S–06–*P*–30

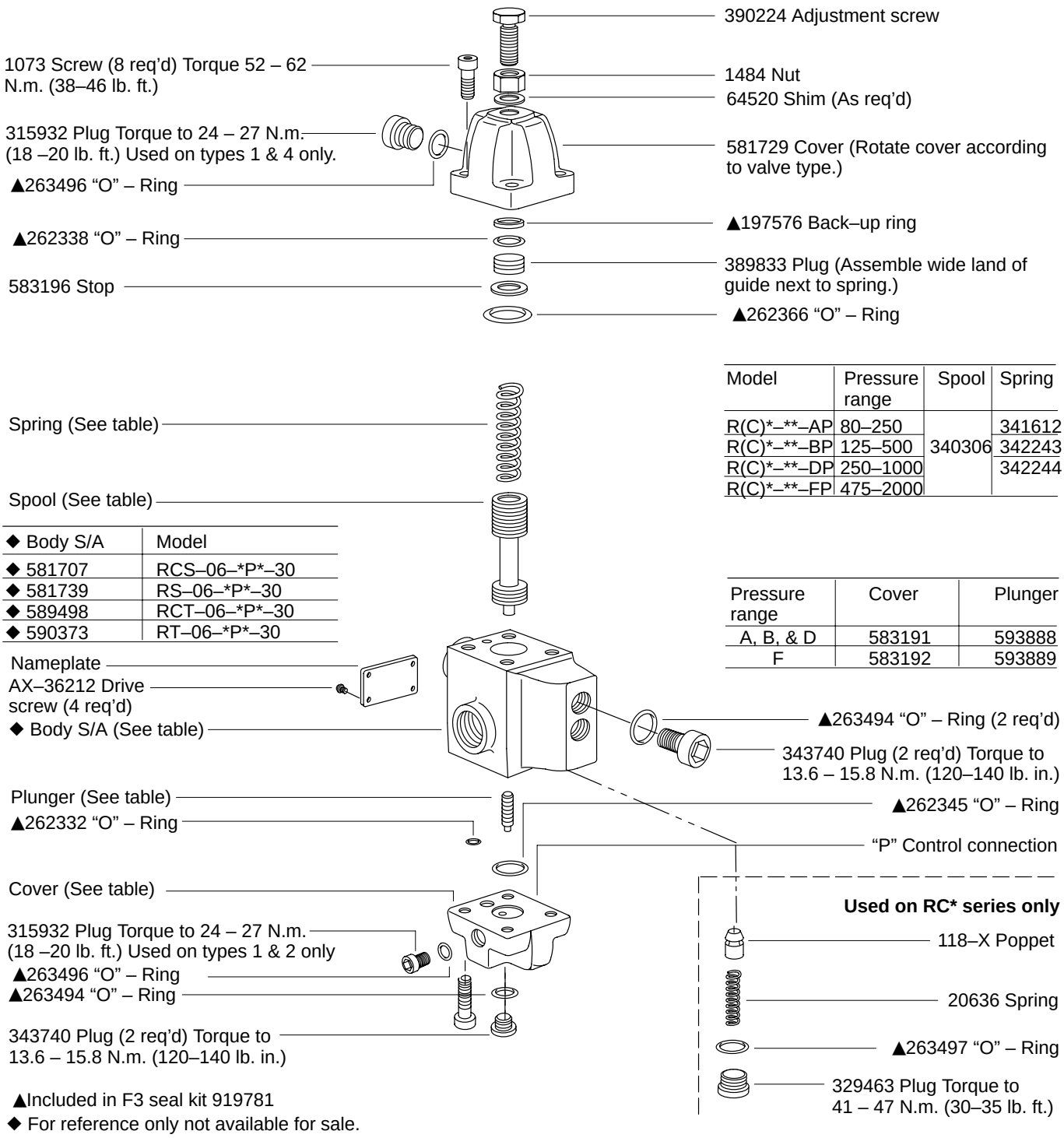

Model	Pressure range	Spool	Spring
R(C)*–**–AP	80–250	340306	341612
R(C)*–**–BP	125–500		342243
R(C)*–**–DP	250–1000		342244
R(C)*–**–FP	475–2000		

◆ Body S/A	Model
◆ 581707	RCS–06–*P*–30
◆ 581739	RS–06–*P*–30
◆ 589498	RCT–06–*P*–30
◆ 590373	RT–06–*P*–30

Pressure range	Cover	Plunger
A, B, & D	583191	593888
F	583192	593889

▲Included in F3 seal kit 919781
◆ For reference only not available for sale.

VICKERS

Model Code

(F3) - R (C) G - 06 - * P * -30

1 2 3 4 5 6 7 8 9

1 **Special seals**
(Omit on STD. models.)

2 **Pressure control valve**

3 **Check valve option**

C – With integral check valve (Reverse free flow)
Omit – No check valve

4 **Mounting**

S – 1.0625–12 UNF–2B thread
T – $^3/_4$ ″ NPTF thread

5 **Nominal valve size**

06 – $^3/_4$ ″ Pipe thread

6 **Pressure range**

A – 80 – 250 PSI
B – 125 – 500 PSI
D – 250 – 1000 PSI
F – 475 – 2000 PSI

7 **Auxiliary remote pressure control connection**

8 **Valve types**

(Inset views at bottom of page show cover positions for the (4) valve types.)

9 **Design**

Typical model number
RCG–06–DP4–30

Note
Assemble covers as shown to obtain valve action desired.

Type 1
RT series – Back pressure valve.
RCT series – Counterbalance valve.
Directly controlled internal drain

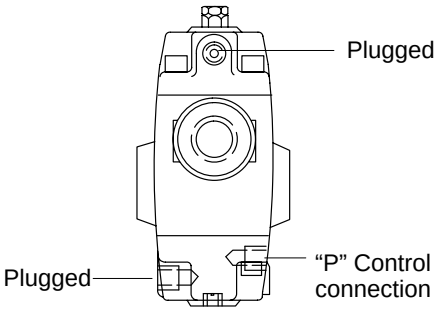

Note
Assemble covers as shown to obtain valve action desired.

Type 2
RT or RCT series – Sequence valves.
Directly controlled external drain

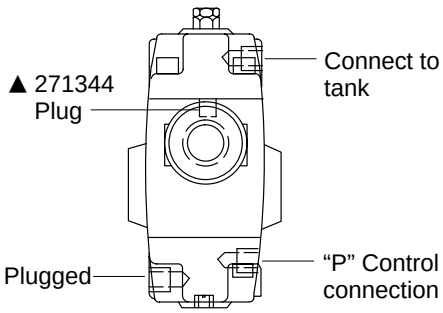

Type 3
RT or RCT series – Sequence valves.
Remotely controlled external drain

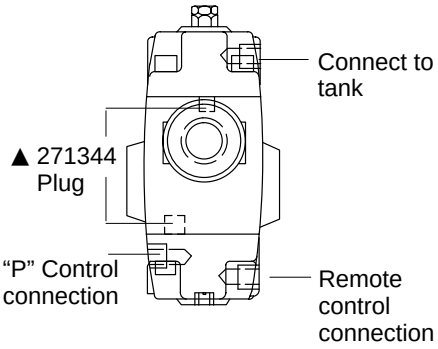

Type 4
RT series – Unloading valve.
RCT series – Counterbalance valve.
Remotely controlled internal drain

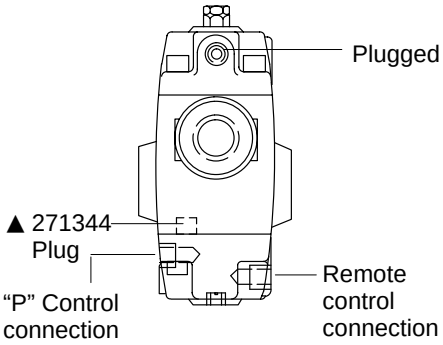

©Eaton Hydraulics, Incorporated 2000,
All Rights Reserved

Printed in U.S.A.