Vickers®

Pressure Controls

Pressure Reducing Valves

X(C)T-H03-*-30
X(C)S-H03-*-30

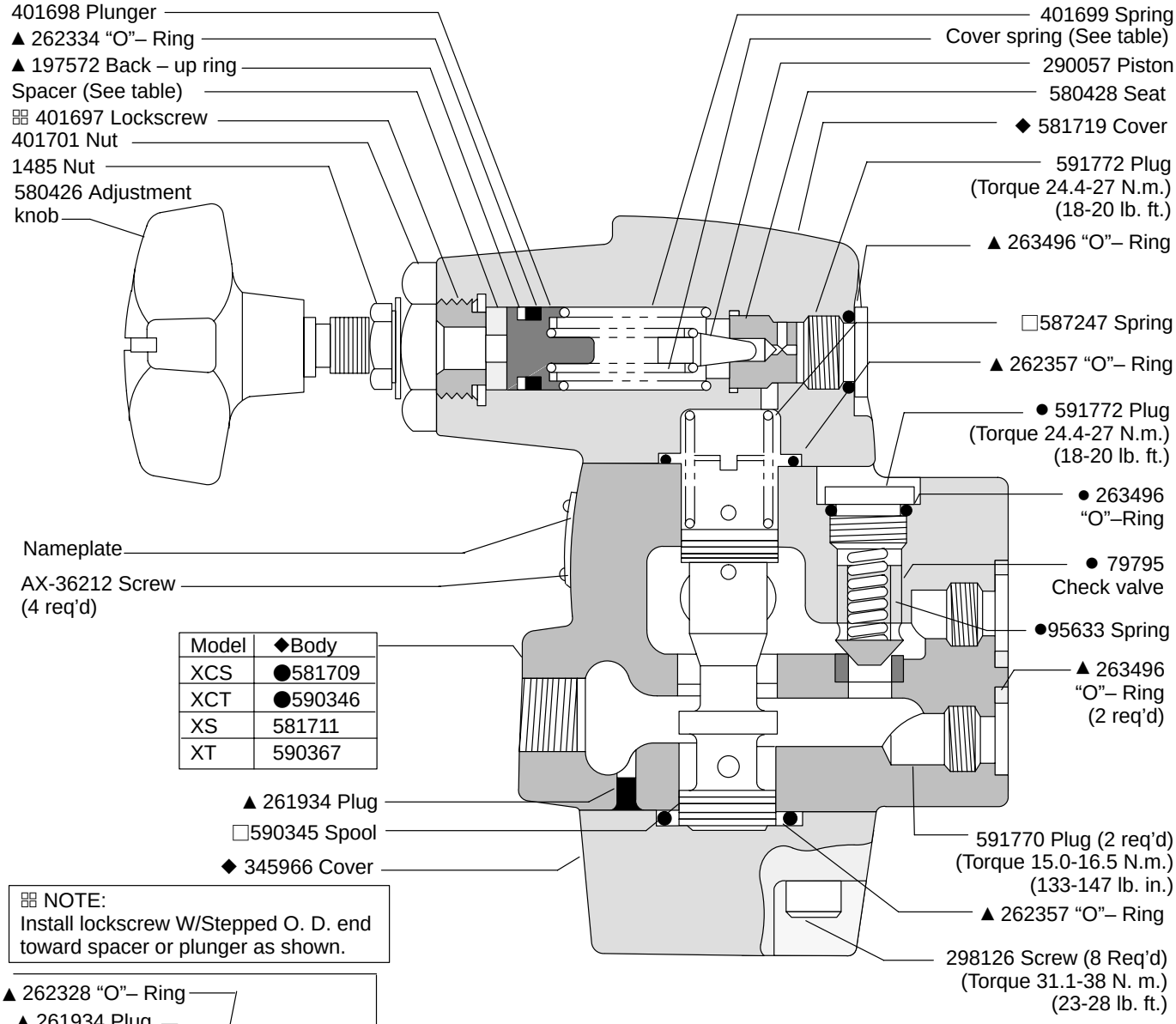

Model	◆Body
XCS	●581709
XCT	●590346
XS	581711
XT	590367

⊞ NOTE:
Install lockscrew W/Stepped O. D. end toward spacer or plunger as shown.

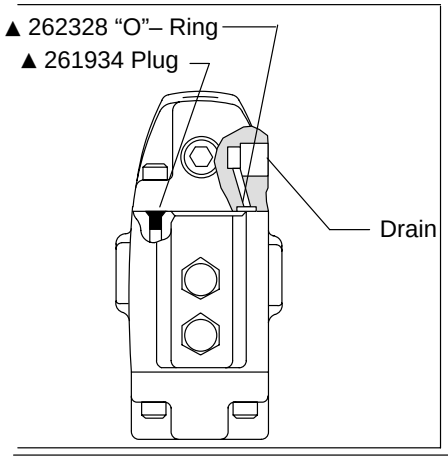

Model	Cover spring	Spacer	Pressure range P.S.I.
X(C)*-H03-1-30	2280	—	1000
X(C)*-H03-2-30	583937		2000
X(C)*-H03-3-30	401700	386715	2850

◆ Not available for sale.

● Used on model XC* only.

▲ Service all units with F3 seal kit 919836.

Model Code

(F3) - X (C) *- H03 - * - 30

1 2 3 4 5 6 7 8

1 **Seals**

F3 - Seals for mineral oil and fire resistant fluids

2 **Pressure Reducing Valve**

3 **Integal Check Valve**

4 **Threaded Connections**

S - .750-16 UNF-2B thd.
T - 3/8 inch NPTF thd.

5 **High Flow – 30 USgpm**

6 **Nominal valve size**

03 - 3/8 inch

7 **Maximum adjustable pressure**

1 – 1000 PSI
2 – 2000 PSI
3 – 2850 PSI

8 **Design**

For satisfactory service life of these components, use full flow filtration to provide fluid which meets ISO cleanliness code **20/18/15** or cleaner. Selections from Eaton OFP,OFR and OFRS filter series are recommended.

Printed in U.S.A.