Pressure Controls

Pressure Reducing Valves

X(C)G–06–* *–30

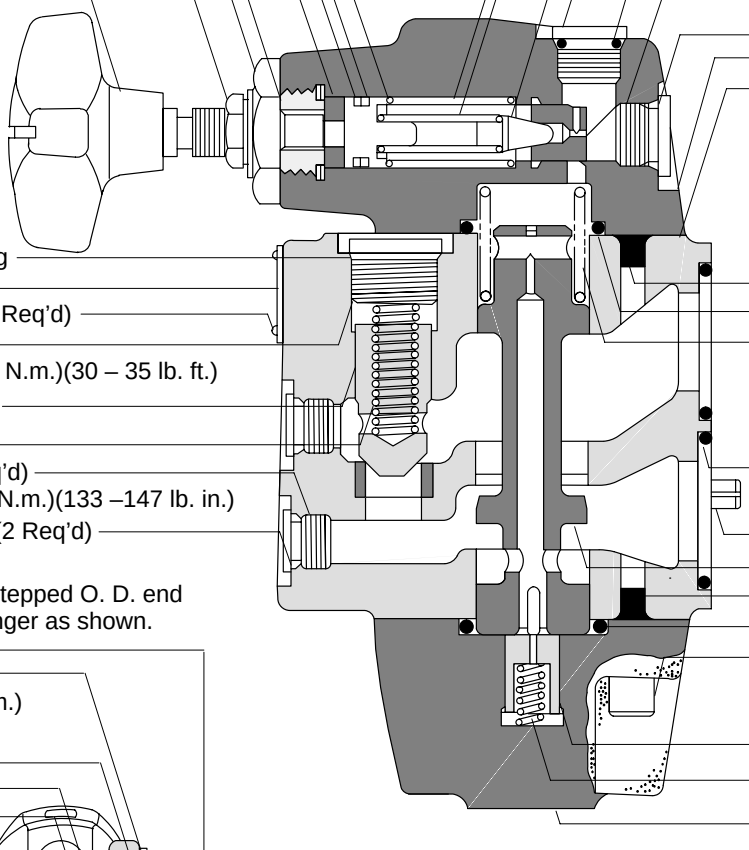

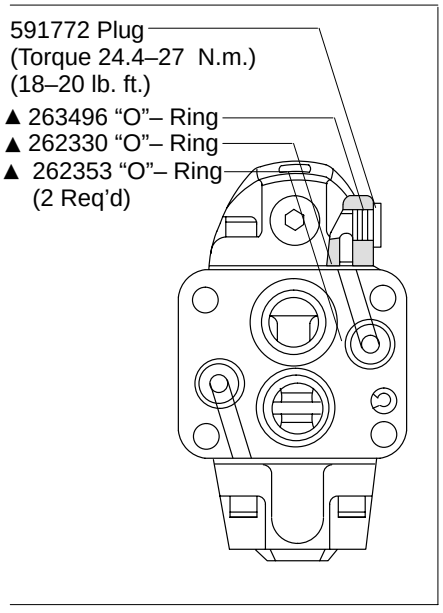

Model	◇ Spring	■ Cover spring	□ Spacer	Pressure range P.S.I.	Rated flow USGPM
X(C)G–**–1B–30	322653	2280	———	80–1000	15
X(C)G–**–1F–30	348614			200–1000	30
X(C)G–**–2B–30	322653	583937		80–2000	15
X(C)G–**–2F–30	348614			200–2000	30
X(C)G–**–3B–30	322653	401700	386715	200–2850	15
X(C)G–**–3F–30	348614				30

▲ Service all units with F3 seal kit 919615.
◆ Not available for sale.
● Used on model XCG only.

Model Code

(F3) - X(C)G - 06 - * * -30

1 2 3 4 5 6 7 8

1 **Seals for mineral oil & fire resistant fluids**

2 **Pressure reducing valve**

3 **Integal check valve**
Omitted – no check valve

4 **Manifold or subplate mounted**

5 **Nominal valve size $^3/_4$ inch**

6 **Maximum adjustable pressure**

1 – 1000 PSI
2 – 2000 PSI
3 – 3000 PSI

7 **Maximum rated flow capacity**

B –15 USGPM
F –30 USGPM

8 **Design**

© Eaton Hydraulics, Incorporated 2000
All Rights Reserved

Printed in U.S.A.