Pressure Controls

Pressure Reducing Valves

X(C)G - 10 - ** - 30

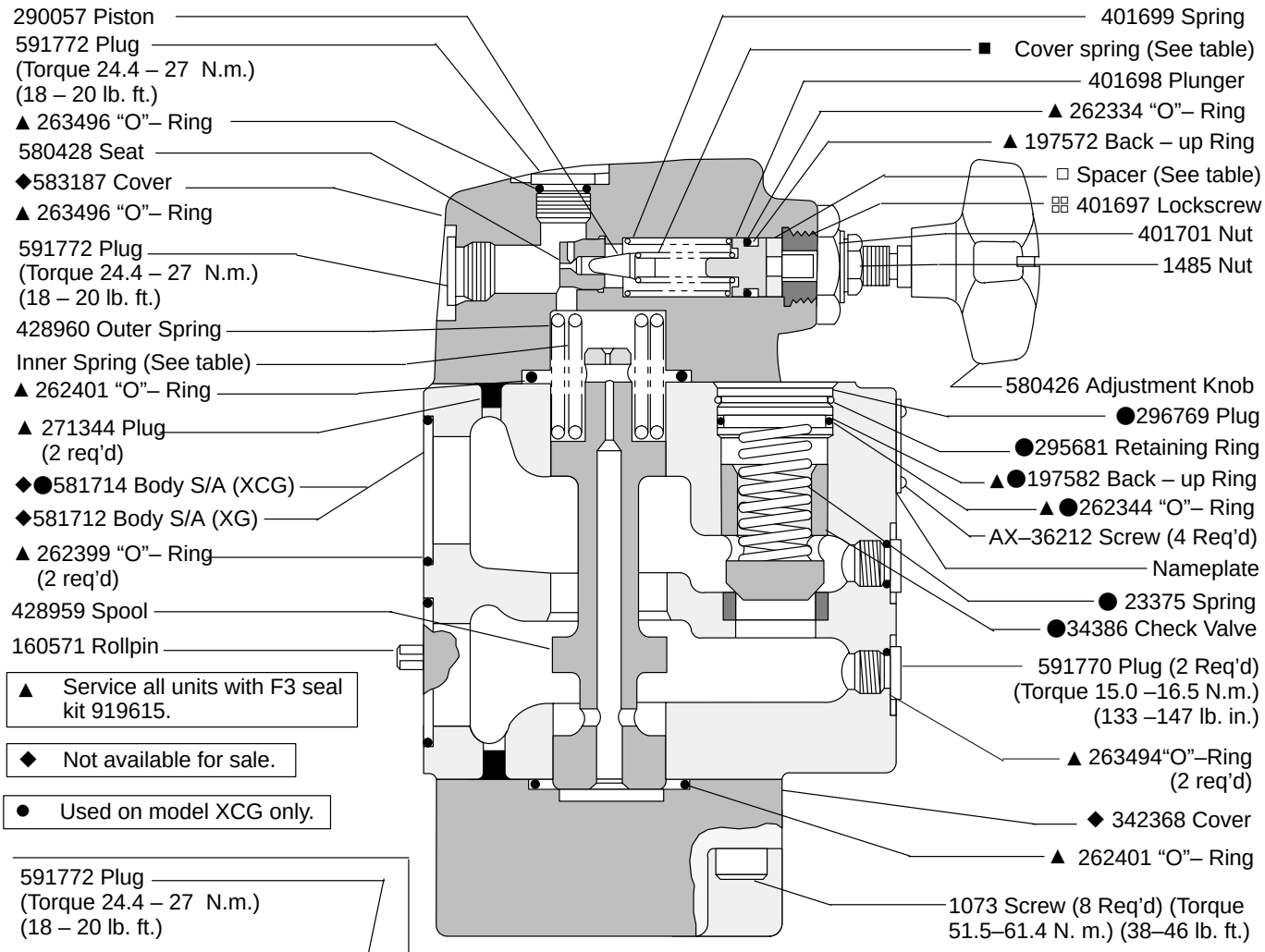

▲ Service all units with F3 seal kit 919615.

◆ Not available for sale.

● Used on model XCG only.

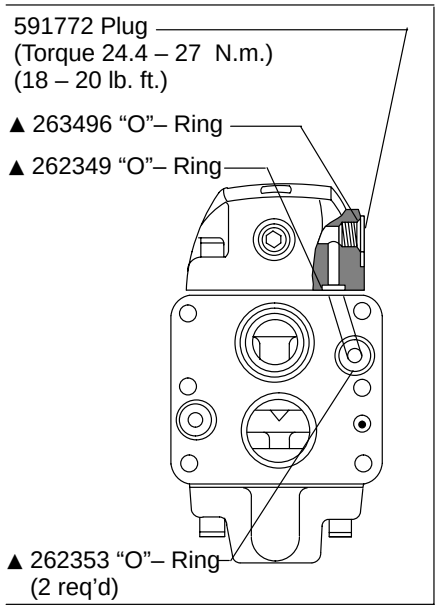

⊞ NOTE
Install lockscrew W/Stepped O. D. end toward spacer or plunger as shown.

Model	Inner Spring	Cover spring	Spacer	Pressure range P.S.I.	Rated flow USGPM
X(C)G–10–1B–30	—	2280	—	100-1000	25
				165-1000	50
X(C)G–10–1F–30	428961			225-1000	75
X(C)G–10–2B–30	—	583937		100-2000	25
				165-2000	50
X(C)G–10–2F–30	428961			225-2000	75
X(C)G–10–3F–30		401700	386715	225-2850	75

Model Code

(F3) - X(C)G - 10 - * * -30

1 2 3 4 5 6 7 8

1 **Seals**

F3 - Seals for mineral oil and fire resistant fluids

2 **Model Series**

X - Pressure reducing valve

3 **Integral Check Valve**

Omitted - No check valve

4 **Manifold or Subplate Mounted**

5 **Nominal Valve Size**

10 - 1-1/4 inch

6 **Maximum Adjustable Pressure**

1 - 1000 PSI
2 - 2000 PSI
3 - 2800 PSI

7 **Maximum Rated Flow Capacity**

B - 50 USgpm
F - 75 USgpm

8 **Design**

For satisfactory service life of these components, use full flow filtration to provide fluid which meets ISO cleanliness code 18/15 or cleaner. Selections from Eaton OFP,OFR and OFRS filter series are recommended.

© Eaton Hydraulics, Incorporated 2000
All Rights Reserved

Printed in U.S.A.