Pressure Controls

Pressure Reducing Valves

X(C)G - H10 - * - 30

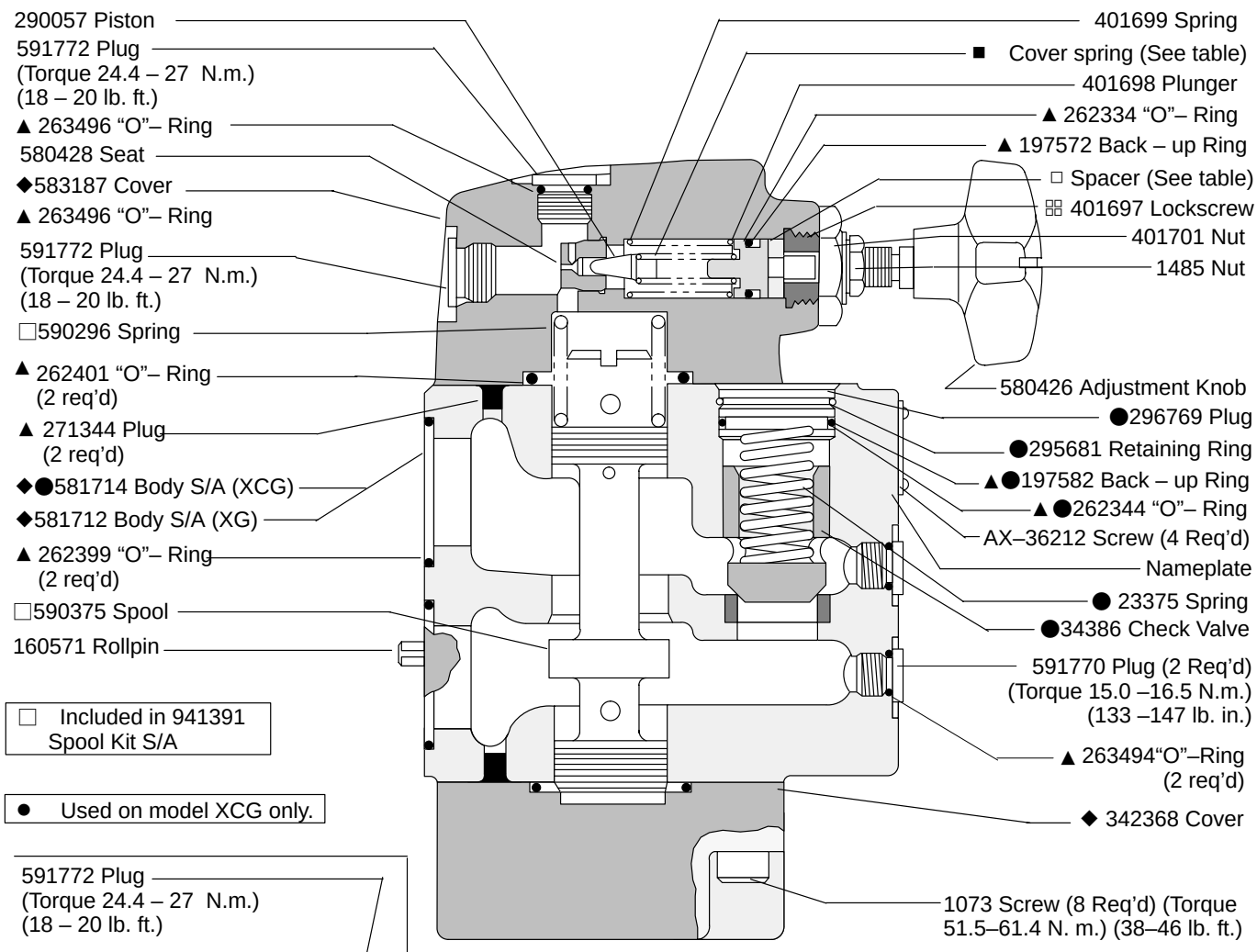

□ Included in 941391 Spool Kit S/A

● Used on model XCG only.

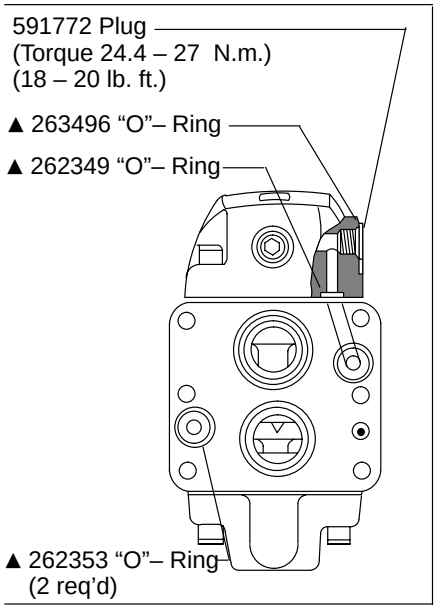

▲ Service all units with F3 seal kit 919852.

NOTE
Install lockscrew W/Stepped O. D. end toward spacer or plunger as shown.

◆ Not available for sale.

Model	Cover spring	Spacer	Pressure range P.S.I.
X(C)G–H10–1–30	2280	—	1000
X(C)G–H10–2–30	583937		2000
X(C)G–H10–3–30	401700	386715	2850

Model Code

(F3) - X(C)G - H 10 * -30

1 2 3 4 5 6 7 8

1 **Seals**

F3 - Seals for mineral oil and fire resistant fluids

2 **Model Series**

X - Pressure reducing valve

3 **Integral Check Valve**

Omitted - No check valve

4 **Manifold or Subplate Mounted**

5 **Nominal Valve Size**

10 - 1-1/4 inch

6 **High Flow**

H - 140 USgpm

7 **Maximum Adjustable Pressure**

1 - 1000 PSI
2 - 2000 PSI
3 - 2800 PSI

8 **Design**

For satisfactory service life of these components, use full flow filtration to provide fluid which meets ISO cleanliness code 18/15 or cleaner. Selections from Eaton OFP,OFR and OFRS filter series are recommended.

© Eaton Hydraulics, Incorporated 2000
All Rights Reserved

Printed in U.S.A.