Service Data

Vickers®

Pumps

Multi-Pressure Relief Valves

CS/CT-(H)-06-*(V)(P)(*)-DG(L)-0*-(H)-(*)-20
CS/CT-(H)-10-*(V)(P)(*)-DG(L)-0*-(H)-(*)-20

Revised 11/01/85

I-3687-S

Model	Head #1		Head #3		●CT-(H)06 Cover S/A	●CT-(H)10 Cover S/A
	● Spring	Pressure Range PSI	● Spring	Pressure Range PSI		
C*-(H)06/(H)10-BC	2280	125-1000	583937	500-2000	942155	942156
C*-(H)06/(H)10-BF			2281	1500-3000	———	———
C*-(H)06/(H)10-CF	583937	500–2000				

●Included in cover subassembly

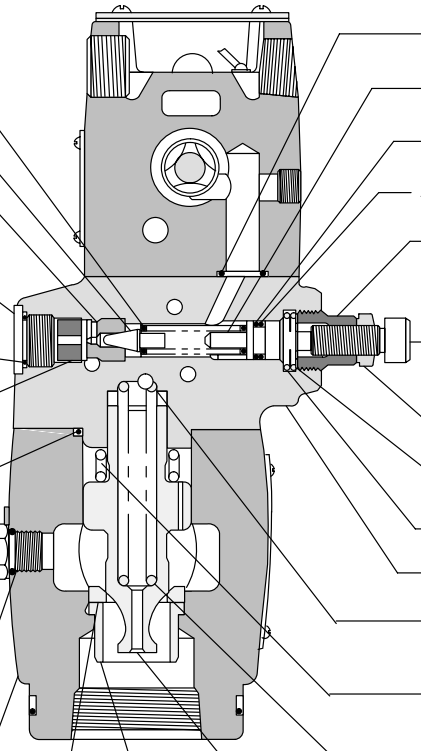

Model	●"O" Ring	Body	Seat	Sleeve	Hydro Cone	Lo–Vent Spring	Hi–Vent Spring	Cover
CS-06	▲262361	581701	343153	———	343154	2077	184458	370666
CS-H06			589473	589472				
CS-10	△262367	580430	283954	———	283952	291822	291821	370671
CS-H10			587996	400730				
CT-06	▲262361	590348	343153	———	343154	2077	184458	370666
CT-H06			589473	589472				
CT-10	△262367	590300	283954	———	283952	291822	291821	370671
CT-H10			587996	400730				

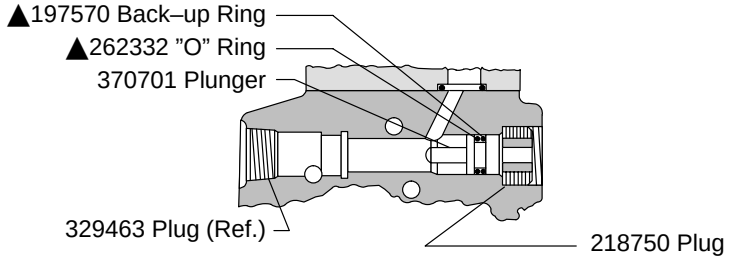

Section showing head arrangement for "E" Vent feature

Use either a Lo-Vent or Hi-Vent spring as shown. Do not use both.

⊘This part used at final test to obtain correct pressure range.

✳**Note**
Coat 292330 Adjusting Screw, 283949 Lock Screw and 1485 Lock-nut with oil prior to assembly.

© Eaton Hydraulics, Incorporated 2000
All Rights Reserved

DG4S4-010N-*-51 Pilot Valve
(Refer to I-3471-S for parts information)

DG4S4-010A-*-50 Pilot Valve
(Refer to I-3478-S for parts information)

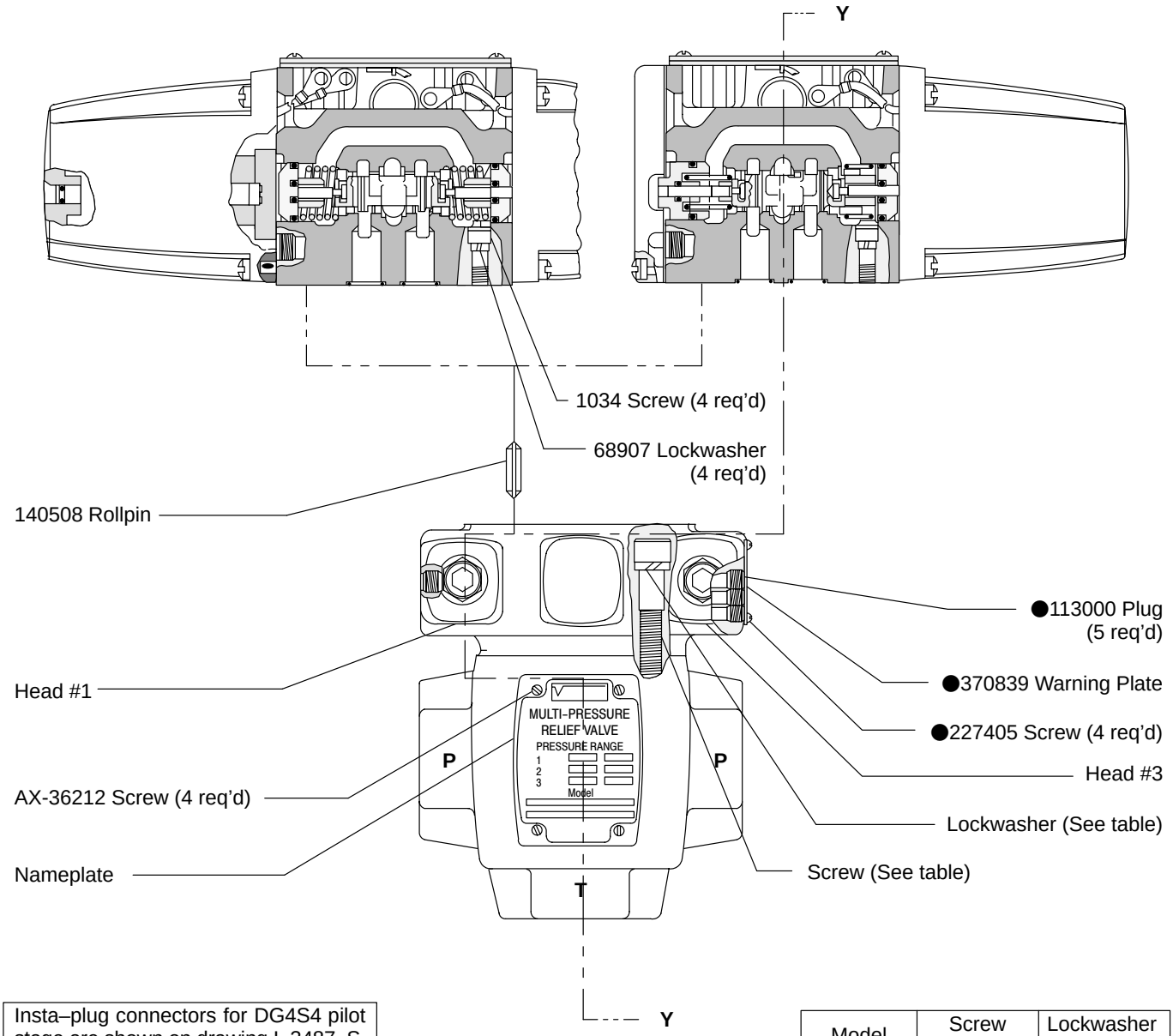

Insta–plug connectors for DG4S4 pilot stage are shown on drawing I–3487–S.

Model	Screw (4 req'd)	Lockwasher (4 req'd)
C*-(H)06	1036	68907
C*-(H)10	1076	68909

All seals, except directional valve interface seals, are F3. Use F3 seal kit to service all units.

▲Included in (F3)C*-(H)06 Seal Kit 919684

∆Included in (F3)C*-(H)10 Seal Kit 919685

WARNNG

Do not use other than a DG4S4-010A-*-50 or a DG4S4-010N-*-51 directional valve as the pilot for this relief valve. Use of a different pilot can block the relief valve, causing excessive system pressure.

Oil immersed solenoid information is shown on drawing I-3498-S.

Model Code

(F3) - C * - (H) ** - * (V) (P) (*) D G (L) - 0 * - (H) - (*) - 20

1 2 3 4 5 6 7 8 9 10 11 12 13 14 15 16 17

1 Seal Material

F3 - Seals for mineral oil and fire resistant fluids

2 Model Series

C - Relief valve

3 Connection

S - Straight thread
T - NPTF threaded

4 Flow Type

H - High flow

5 Nominal Size

06 - ¾”
10 - 1¼”

6 Pressure Range PSI
(For head #1 or #3)

B - 125 - 1000
C - 500 - 2000
F - 1500 - 3000
E - Vent

7 Vent Spring

V - Hi-vent spring
Omitted - Lo-vent spring

8 Insta Plug Type

P - Insta Plug
Omitted - Not required

9 Plug Type

A - With plug only
B - With plug and receptacle
Omitted - Not required

10 Valve Type

D - Directional valve, pilot stage

11 Mount Type

G Manifold or subplate mounted

12 Solenoid Light Type

L - Solenoid indicator lights
Omitted - Without lights

13 Spool Type

O - Open centered spool

14 Pilot Valve Type

N - No–spring detent pilot stage
A - Offset pilot stage

15 Solenoid Type

H - Oil immersed solenoid
Omitted - Standard solenoid

16 Solenoid Voltage

Omitted - Standard solenoid 115 AC 60

17 Design

For satisfactory service life of these components in industrial applications, use full flow filtration to provide fluid which meets ISO cleanliness code 18/15 or cleaner. Selections from Eaton OFP, OFR, and OFRS series are recommended.

Printed in U.S.A.