Service Data

Vickers®

Valves

Remote Electrically Modulated Relief Valves

CGE–10–1–22
CGE–10–3(V)–22–(S6)

Revised 06–01–99

I–3696–S

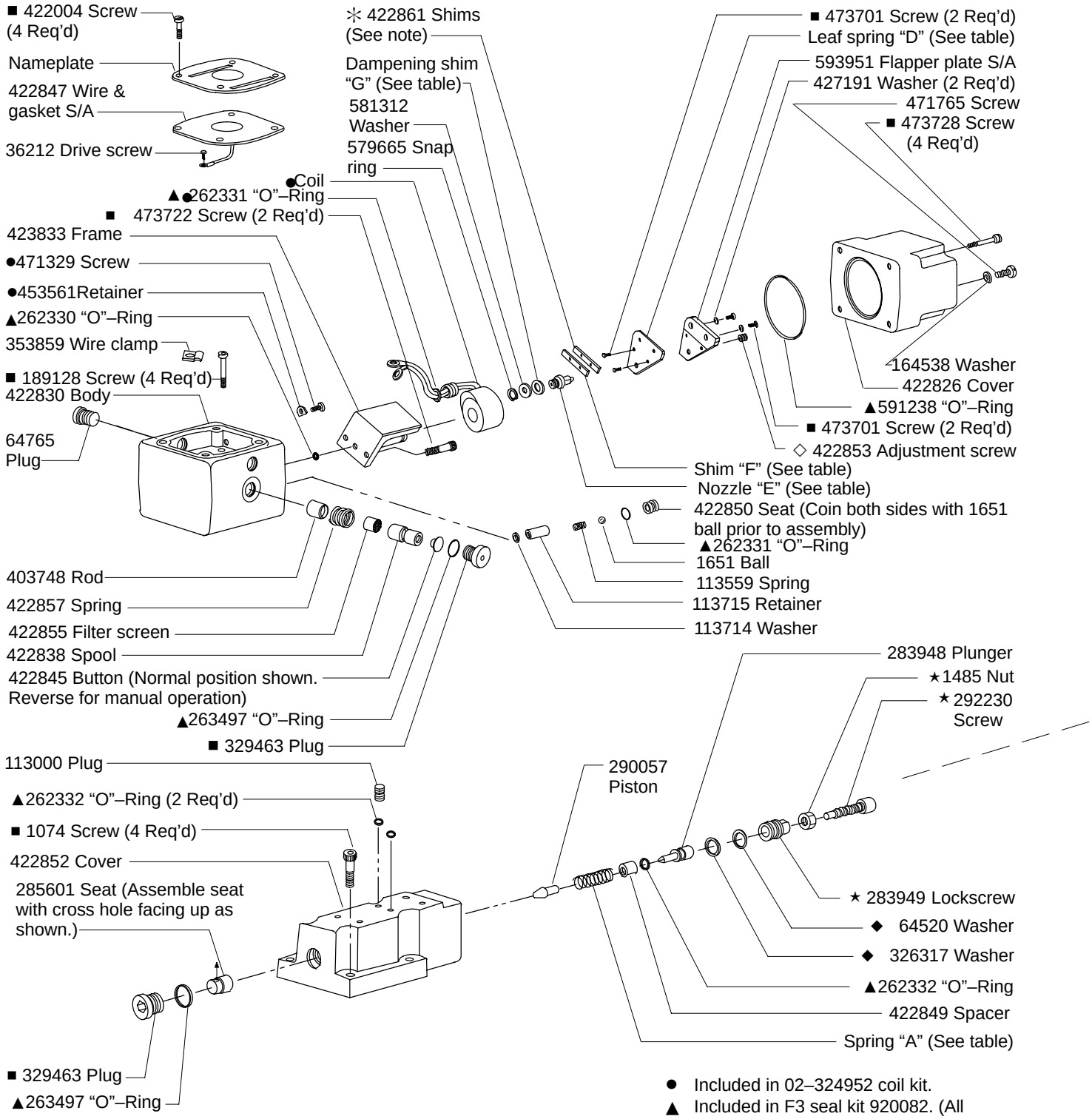

■ Screw	■ Plug	Torque (N.m.)	Torque (lb. in.)	Torque (lb. ft.)
1074	———	36.0 Max.	318 Max.	26.5
189128		4.7 Max	42 Max	———
———	329463	40.7 – 47.5	360 – 420	30 – 35
	343740	14.7 – 18.1	130 – 160	
422004		0.7 – 0.9	6 –8	
473701	———	1.4 – 1.6	12 – 14	———
473722		4.0 – 4.5	35 – 40	
473728		4.0 – 4.5	35 – 40	

● Included in 02–324952 coil kit.
▲ Included in F3 seal kit 920082. (All seals, except interface, are F3. Use the F3 seal kit to service all units.)
□ At assembly, adjust screw until dimension between screw and nozzle is .004 – .005 in. or 0.10 – 0.13 mm.
■ Included in Screw/Plug/Nozzle Torque tables.
✳ Number of shims are factory selected to obtain maximum pressure setting.
◇ Not available for sale
★ Coat with oil prior to assembly
◆ Arrange for correct pressure adjustment range

©Eaton Hydraulics, Incorporated 2000
All Rights Reserved

45° Cross sectional view of nozzle, flapper and coil.

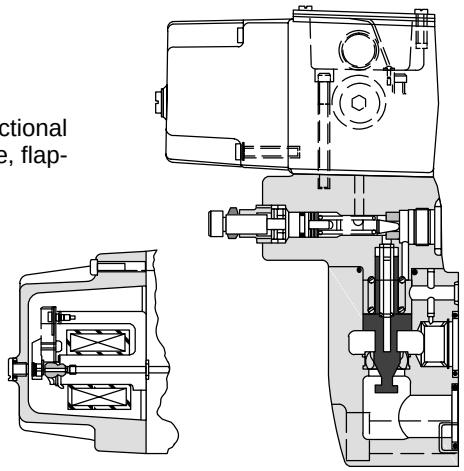

■ Nozzle "E"	Torque (lb. in.)	Torque (N.m.)
424189	11–13	1.2–1.5
422842	13–15	1.5–1.7

Model	Pressure range	Spring "A"	Spring "B"	Leaf spring "D"	■ Nozzle "E"	Shim "F"	Damping shim "G"
CGE–10–1–22	75–1000 psi	2280	424202	424188	424189	424190	424724
CGE–10–3–22	150–3000 psi	2281	424731	422835	422842	422839	———
CGE–10–3V–22	300–3000 psi	2281	291821	422835	422842	422839	———

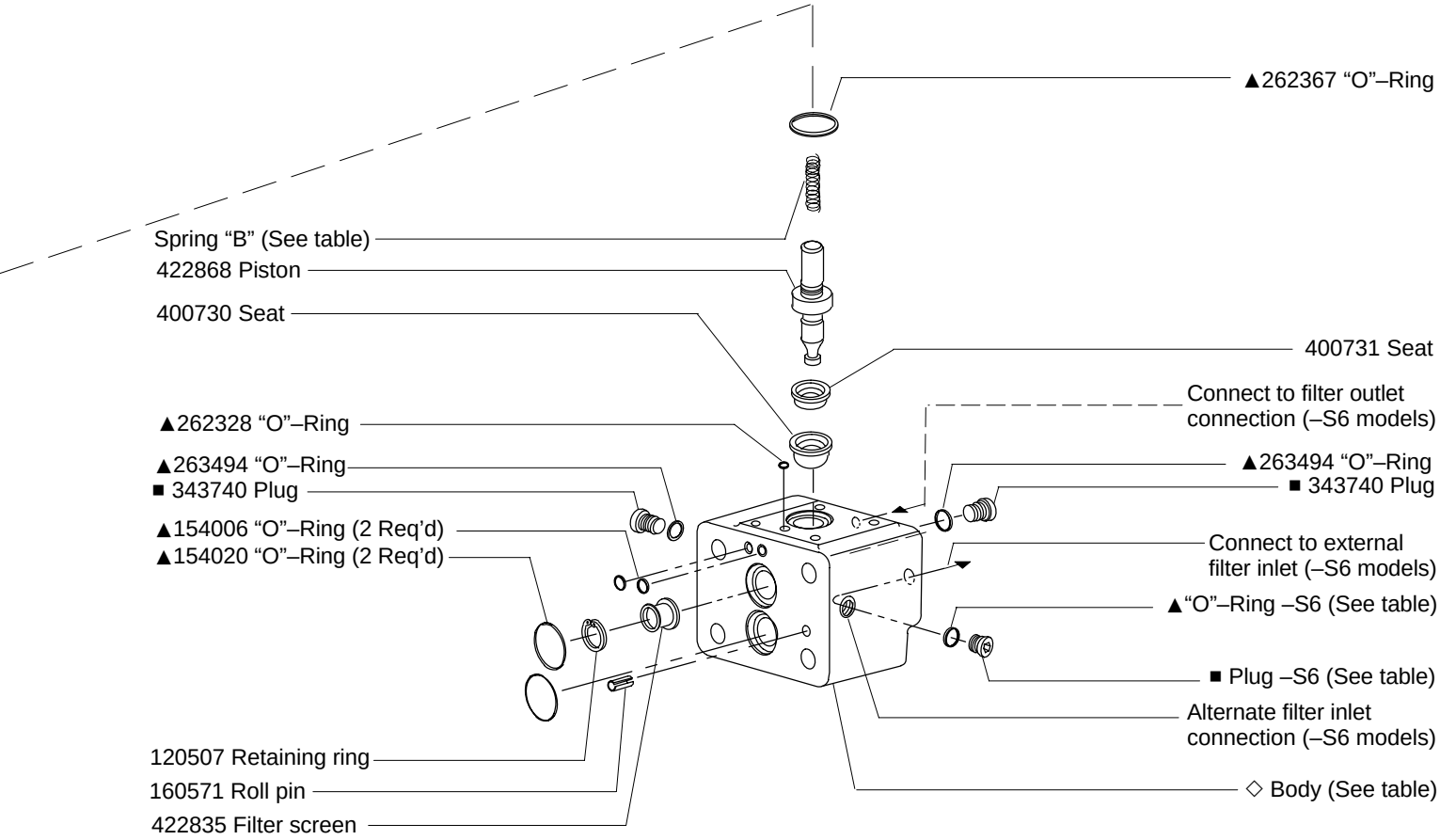

Model	◇ Body	▲ "O"–Ring	▲ Plug	External 3000 PSI 35 micron filter Req'd
CGE–10–**–22	597719			No
CGE–10–**–22–S6	597832	263494	343740	Yes