Service Data

Vickers®

Relief Valves

Multi—Pressure Relief Valves

(F3)—C/G/S/T—06/10(*)(V)—DG—8C(L)**—(V)M—(S*)*****(L)******—40/50**

NOTE: Lubricate all parts & seals with a thin coat of oil at assembly.

WARNING
Use only a DG4V3(S)−8C−60 directional valve as a pilot for this relief valve. Use of a different pilot can block relief valve, causing excessive system pressure.

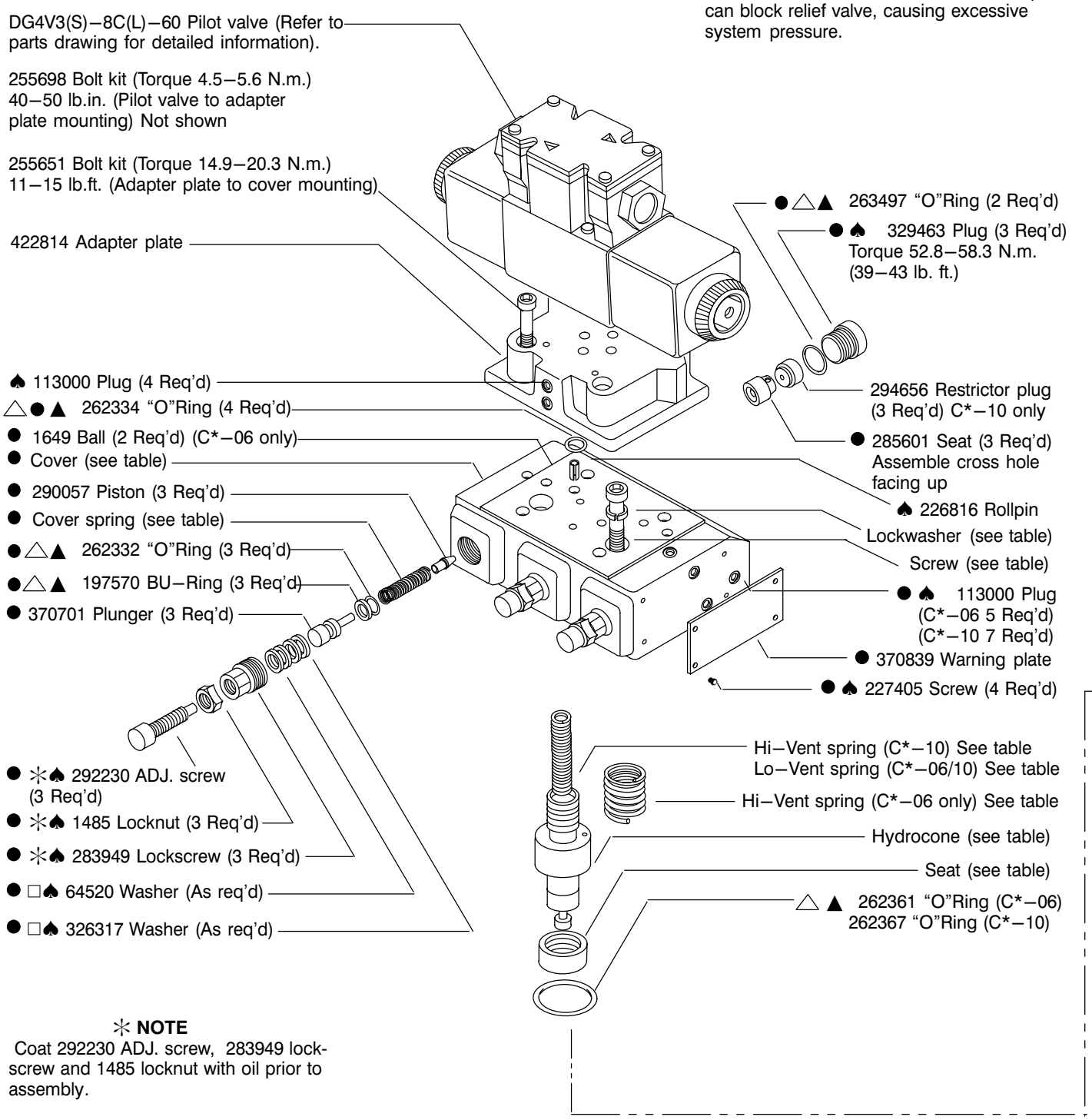

✳ NOTE
Coat 292230 ADJ. screw, 283949 lock-screw and 1485 locknut with oil prior to assembly.

□ NOTE
These parts used at final test to obtain correct pressure range.

Model	Seat	Hydrocone	Lo−Vent spring	Hi−Vent spring	Cover
C*−06	343153	343154	2077	184458	370664
C*−10	283954	283952	291822	291821	370669

NOTE
Use either a Lo−Vent or Hi−Vent spring. Do not use both. (See model code)

NOTE
For satisfactory service life of these components in industrial applications, use full flow filtration to provide fluid which meets ISO cleanliness code 18/15 or cleaner. OFP, OFR, and OFRS series filters are recommended.

©Eaton Hydraulics, Incorporated 2000
All Rights Reserved

Model	Screw (4 Req'd)	Torque		Lock washer (4 Req'd)
		lb. ft.	N.m	
C*−06	1036	11−15	14.9−20.3	68907
C*−10	1076	35−43	47.5−58.3	68909

Sectional "E" vent head 1, 2, or 3

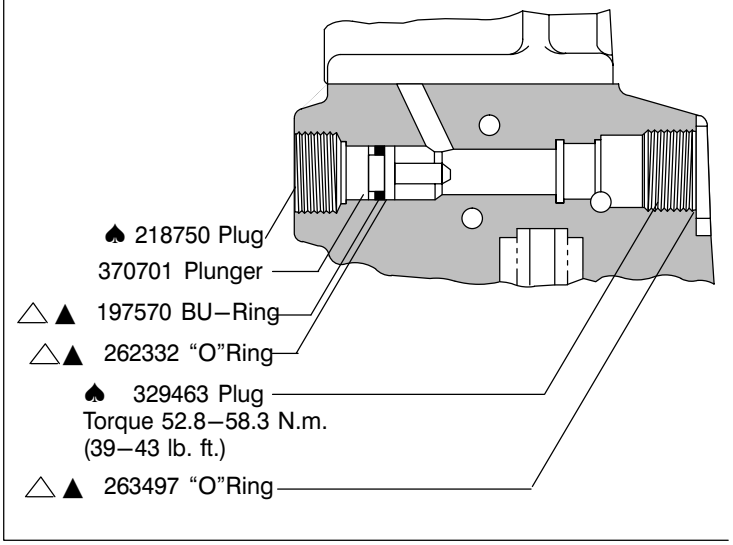

Cover kits for C*−06−*** are available for several spring arrangements	
Spring order in head 1 2 3	● Included in kit (−06 only)
−C B F−	● 942198
−C B C−	● 942202
−F F B−	● 942326

Model	Cover spring	Pressure range psi (bar)
C*−**−B	2280	125−1000 (8.5−70)
C*−**−C	583937	500−2000 (35−140)
C*−**−F	2281	1500−3000 (105−210)

♠ Part	Kit
1485	944064
AX−36212	944053
1649	944067
64520	944068
113000	944055
160571	944069
218750	944070
226816	944071
227405	944074
292230	944072
326317	944073
329463	944041
343740	944038

Parts with ♠ available only in kits of 25.
Reference kit on parts order.

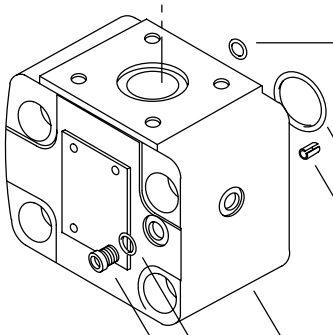

△154006 "O"Ring

▲154020 "O"Ring (CG−06)
△154024 "O"Ring (CG−10)

♠ 160571 Rollpin

◆ CG Body (see table)

△▲ 263494 "O"Ring

♠ 343740 Plug
Torque 14.9−16.5 N.m.
(133−147 lb. in.)

Model	◆ Body	
	−06	−10
CG	580456	581703
CS	581701	580430
CT	590348	590300

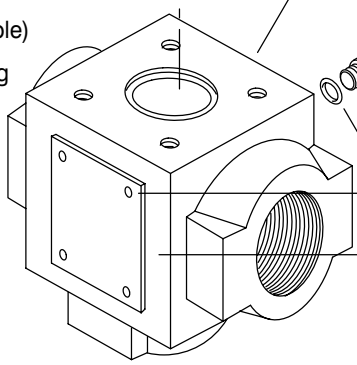

◆ CS/CT body (see table)
CT shown

♠ 343740 Plug
Torque 14.9−16.5 N.m.
(133−147 lb. in.)

△▲ 263494 "O"Ring

♠ AX−36212 Screw (4 Req'd)

Nameplate

▲ Included in −06 F3 seal kit 919684

△ Included in −10 F3 seal kit 919685

♠ Available only in kits of 25.

◆ Not available for sale

Model Code

(F3) - C* ** - **(*)(V) - DG - **(L) - (V)M - (S*) - * - ** - * - *(L) - ** * - *** - ** - EN****

1 2 3 4 5 6 7 8 9 10 11 12 13 14 15 16 17 18 19 20 21 22

1 Seals for mineral oil & fire resistant fluids

2 Relief valve connections

G — Subplate mounting
S — Straight threads
T — NPTF threads

3 Valve size

06 — 3/4”
10 — 1–1/4”

4 Pressure range

B — 125–1000 psi
C — 500–2000 psi
F — 1500–3000 psi
E — Vent

5 High vent

Blank — Omit for low vent models

6 Directional valve

7 Spool type & spring arrangement

8C — Spring centered, Tri–pressure

8 Left hand build
Omit for standard models

9 Manual override options (included in pilot valve model code)

Blank — Plain override solenoid ends only
H — Waterproof override solenoid ends only
H2 — Waterproof override both ends of single solenoid
M — Serviceable manual overrides in solenoid ends only
P2 — Plain override both ends of single solenoid
Y — Lockable manual overrides solenoid ends only
Z — No overrides in either end

10 Solenoid energization identity

Blank — Standard arrangement for ANSI B93.9 (energise solenoid A for flow P to A port)
V — Solenoid identification determined by position of solenoid. (Solenoid A at port A end and/or solenoid B at port B end.
(All 4 & 8 spools are always V code)

11 Flag symbol heading electrical options & features

12 Spool position monitoring switch (tank pressure rating 10 bar only)

S1 — Switch, normally open, U coils only
S2 — Switch, normally closed, U coils only
S3 — Switch, wired normally open, P*
S4 — Switch, wired normally closed, P*
S5 — Switch, free leads, FW & FJ only
Omit if not required

13 Coil type

U — ISO 4400
P — Plug in coil
F — Flying lead
SP1 — Single 6,3 series spade to IEC 760
SP2 — Dual 6,3 series spade to IEC 760

14 Electrical connections (F type coil only) omit if not required

T — Wired terminal block
PA — Instaplug male receptacle only
PB — Instaplug male & female receptacle
PA3 — Three pin connector & terminal block
PA5 — Five pin connector & terminal block

15 Housing (F type coils only)

W — 1/2 NPT thread wiring housing
J — 20 mm thread wiring housing

16 Electrical options

1 — ISO with fitted plug, U type coils only
7 — Surge damper, P type coils only
9 — Rectifier (fast type) P type coils only
12 — Rectifier (slow type) P type coils only

17 Solenoid indicator lights (F build only) To be used with T terminal block models.
(Omit if not required)

18 Coil indentification

19 Pilot valve code (tank pressure rating)

2 — 10 bar (145 psi) use with switch models S*
5 — 100 bar (1450 psi) for all other models

20 Pilot valve port orifices

21 Design

40 — DG4V3S–60
Standard pilot valve
50 — DG4V3–60
High performance pilot valve

22 Special modifications (omit if not required)

7 Thru 20 included in pilot valve model code

Printed in U.S.A.