Eaton
Hydraulics
Division

Parts Information

Model 31520 - 31530 Directional Control Valve

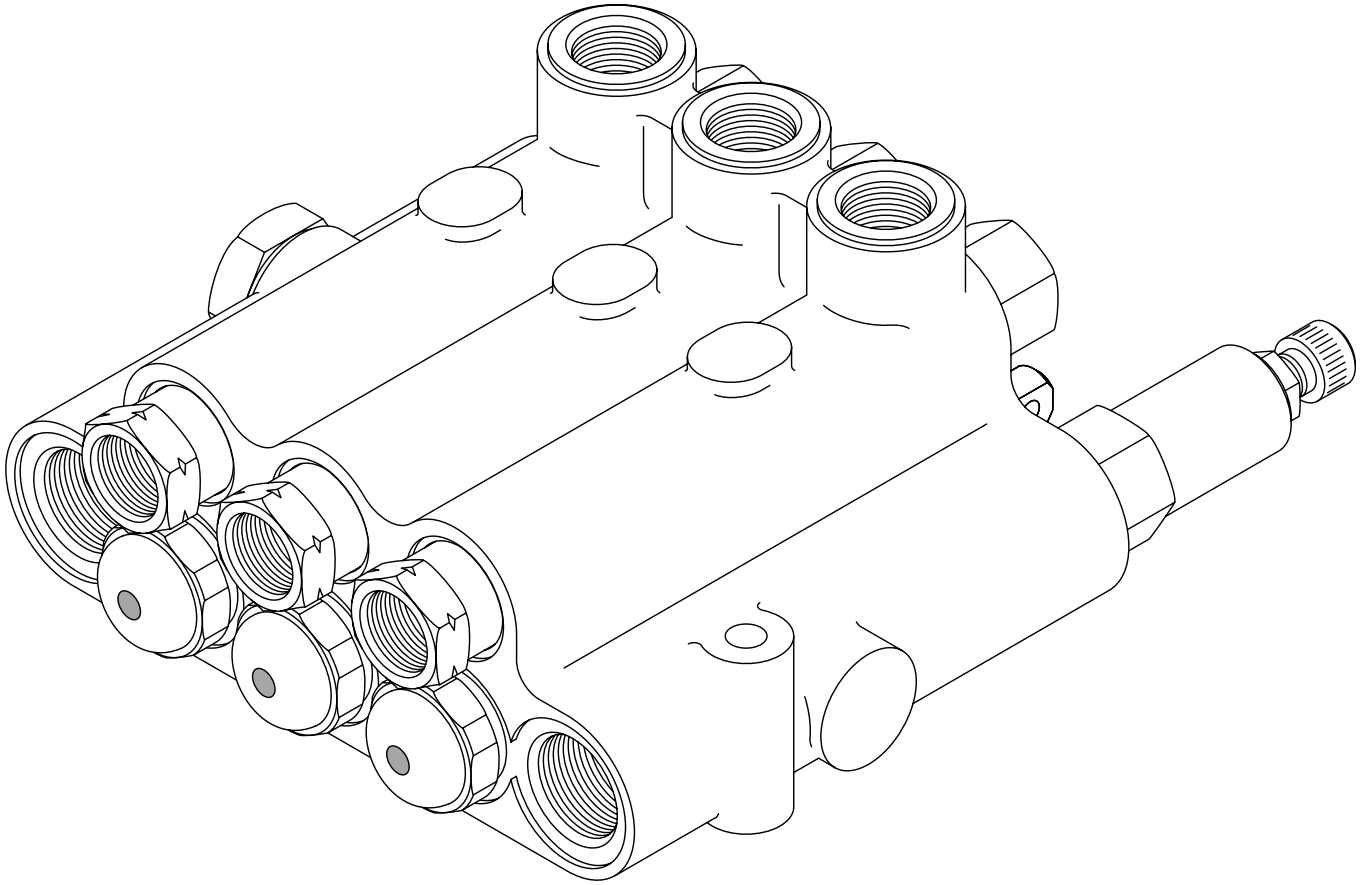

Parts Drawing

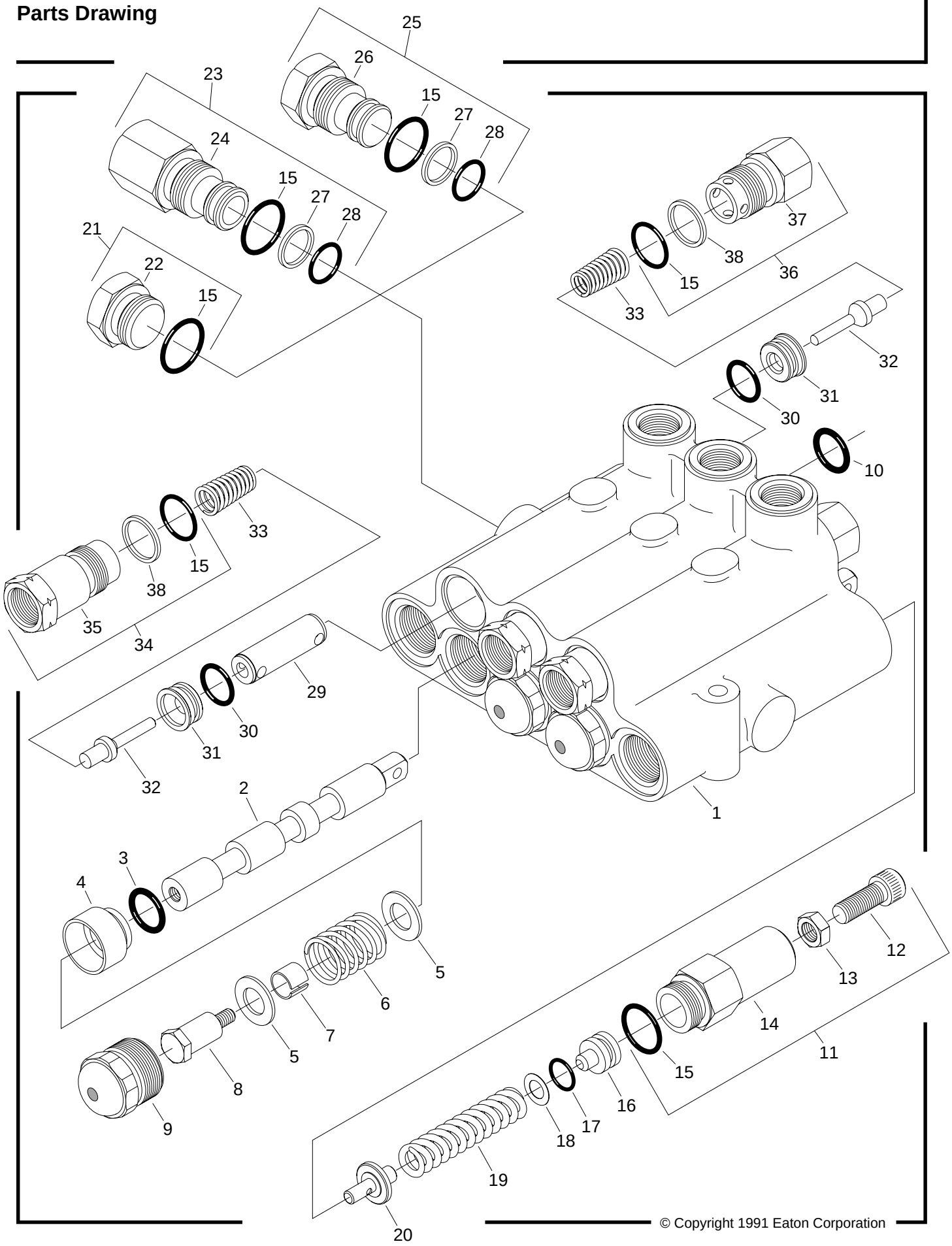

© Copyright 1991 Eaton Corporation

Ref. No.	Description	Part Number	Quantity
1	Body	NSS	1
2	Spool	NSS	A/R
~ 3	O-ring (Spring End)	16003 - 612	1/Spool
4	Bushing	31500 - 358	1/Spool
5	Washer	16048 - 1	2/Spool
6	Spring, Spool	33002 - 24	1/Spool
7	Spool Spacer	31901 - 6	1/Spool
8	Spool Screw	31503 - 63	1/Spool
9	Spool Cap Assembly	31500 - 372	1/Spool
	Breather Plug	16066 - 403	1/Spool
~ 10	O-ring (Handle End)	16004 - 663	1/Spool
11	Relief Valve Plug Assembly	31500 - 549	1
12	Cap Screw	16148 - 610	1
13	Jam Nut	16024 - 6	1
14	Relief Valve Cap	31500 - 548	1
~ 15	O-ring	16003 - 14	A/R
16	Spring Guide	30501 - 418	1
~ 17	O-ring	16003 - 9	1
† 18	Shim Washer	16048 - 69	A/R
19	Relief Valve Spring	*	1
20	Poppet	30501 - 417	1
21	Standard Plug Assembly	16169 - 1140	1
22	Standard Plug	NSS	1
23	Pressure Beyond Plug Assy. (7/8-14 SAE)	30501 - 74	1
24	Pressure Beyond Plug (7/8-14 SAE)	NSS	1
25	Closed Center Plug Assembly	30501 - 96	1
26	Closed Center Plug	NSS	1
27	Back-Up Ring	16101 - 204	1
28	O-ring	16015 - 4	1
29	Check Plunger	15440 - 17	1/Spool
~ 30	O-ring	16003 - 11	2/Spool
31	Seat	30000 - 36	2/Spool
~ 32	Poppet Assembly	15440 - 317	2/Spool
33	Check Spring	31500 - 551	2/Spool
34	Seat Retaining Plug Assembly with Work Port	31500 - 426	1/Spool
35	Seat Retaining Plug with Work Port	NSS	1/Spool
36	Seat Retaining Plug Assembly	31500 - 546	1/Spool
37	Seat Retaining Plug	NSS	1/Spool
~ 38	Back-Up Ring	16011 - 214	2/Spool
	Seal Repair Kits		
	One Spool Valve with Relief	31521 - 908	
	Two Spool Valve with Relief	31522 - 913	
	Three Spool Valve with Relief	31523 - 917	
	One Spool Valve without Relief	31530 - 919	
	Two Spool Valve without Relief	31532 - 902	
	Three Spool Valve without Relief	31530 - 920	

NSS Not sold separately
A/R As required
† Install the same shim thickness as removed. At least one shim is required.
* Refer to the table on the back page for specific part numbers.
~ Parts included in Seal Repair Kits.

Handle Parts

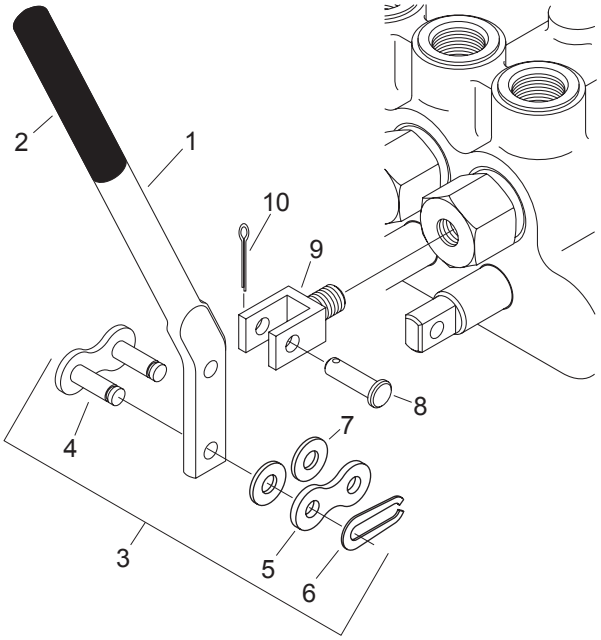

Ref. No.	Description	Part Number	Quantity
	Handle Kit	31500 - 908	1/Spool
1	Handle	31500 - 547	1
2	Handle Cover	16126 - 85	1
3	Handle Link Assy.	30501 - 331	1
4	Connecting Link	30501 - 332	1
5	Link Plate	30501 - 333	1
6	Spring Clip	30501 - 334	1
7	Washers	32016 - 7	2
8	Clevis Pin	31900 - 711	1
9	Lever Support	31900 - 710	1
10	Cotter Pin	16027 - 203	1

Ref. No. 19 Relief Valve Spring

Pressure Adjustment Range	Part Number
1000 - 1500 PSI	17060 - 37
1450 - 2000 PSI	17060 - 38
1950 - 2300 PSI (Standard)	17060 - 39
2250 - 2500 PSI	17060 - 40

Information on orifice plates is contained in the Orifice Plate Catalog Sheet, Form 11-502.

Eaton
Fluid Power Group
Hydraulics Business USA
14615 Lone Oak Road
Eden Prairie, MN 55344
USA
Tel: 952-937-9800
Fax: 952-294-7722
www.eaton.com/hydraulics

Eaton
Fluid Power Group
Hydraulics Business Europe
Route de la Longeraie 7
1110 Morges
Switzerland
Tel: +41 (0) 21 811 4600
Fax: +41 (0) 21 811 4601

Eaton
Fluid Power Group
Hydraulics Business Asia Pacific
11th Floor Hong Kong New World Tower
300 Huaihai Zhong Road
Shanghai 200021
China
Tel: 86-21-6387-9988
Fax: 86-21-6335-3912

Powering Business Worldwide

© 2008 Eaton Corporation
All Rights Reserved
Printed in USA
Document No. E-VLDI-TP001-E
Supersedes 06-522
December 2008