Flow Controls, Non-Compensated

FN-4, 20 Series

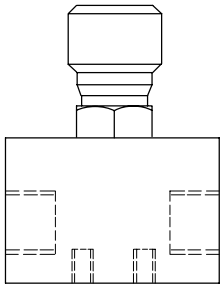

Basic Characteristics

Connection . . . . . Pipe mounted
Max. operating
pressure . . . . . 140 bar (2000 psi)
Nominal flow . . . . 9 L/min (2.38 USgpm)

General Description

The FN-4 valve is an adjustable restrictor valve fitted with an integral check. It allows restricted flow in one direction and free flow in the opposite direction.

Functional Symbol

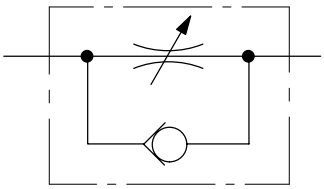

Model Code

(F3-) FN (1) -4 (K) - 20

1 2 3 4

1 Seals for phosphate ester fluids
Omit when not required

2 Valve needle type
1 = For flows up to 2 L/min (0.53 USgpm)
Omit for high flows

3 Method of adjustment
K = Knurled screw
Omit for set screw and locknut

4 Design number, 20 series
Subject to change.
Installation dimensions remain as shown for designs 20-29 inclusive.

Operating Data

Max. Pressure . . . . . 140 bar (2000 psi)

Flow/Pressure Data
Typical with petroleum oil at 21 cSt (102 SUS).

Restrictor flow
FN models . . . . . up to 9 L/min (2.38 USgpm)
FN 1 models . . . . . 16 ml/min to 2 L/min (0.04 to 0.53 USgpm)

Return flow
Check valve
cracking pressure . . . . . 0,7 bar (10 psi)
Pressure drop at
9 L/min (2.38 USgpm) . . 3,5 bar (50 psi)

Hydraulic Fluids
All valves can be used with antiwear hydraulic oils, water-in-oil emulsions and water glycols. Add prefix “F3” to model designation when phosphate ester (not alkyl-based) or chlorinated hydrocarbons are to be used.

“F3” models can also operate on the same fluids as the other valves.

The extreme operating viscosity range is from 860 to 13 cSt (4000 to 70 SUS) but the recommended running range is from 54 to 13 cSt (250 to 70 SUS).

For further information about fluids see catalog 920.

Temperature Limits
Ambient
Min. . . . . –20°C (–4°F)
Max. . . . . +70°C (158°F)

Fluid temperatures

	Petroleum oil	Water-containing
Min.	–20°C (–4°F)	+10°C (50°F)
Max.*	+80°C (176°F)	+54°C (130°F)

* *To obtain optimum service life from both fluid and hydraulic system, 65°C (150°F) normally is the maximum temperature except for water-containing fluids.*

For synthetic fluids consult manufacturer or Vickers where limits are outside those for petroleum oil.

Whatever the actual temperature range, ensure that viscosities stay within the limits specified in the “Hydraulic Fluids” section.

Contamination Control Requirements
Recommendations on contamination control methods and the selection of products to control fluid condition are included in Vickers publication 9132 or 561, “Vickers Guide to Systemic Contamination Control”. The book also includes information on the Vickers concept of “ProActive Maintenance”. The following recommendations are based on ISO cleanliness levels at 2 µm, 5 µm and 15 µm. For products in this catalog the recommended levels are:

Up to 210 bar (3050 psi) 19/**17**/**14**
Above 210 bar (3050 psi) 19/**17**/**14**

Installation Dimensions
mm(inches)

3rd angle projection

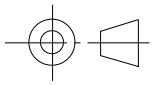

Model (F3-)FN*-4K-20
with Micrometer Adjuster

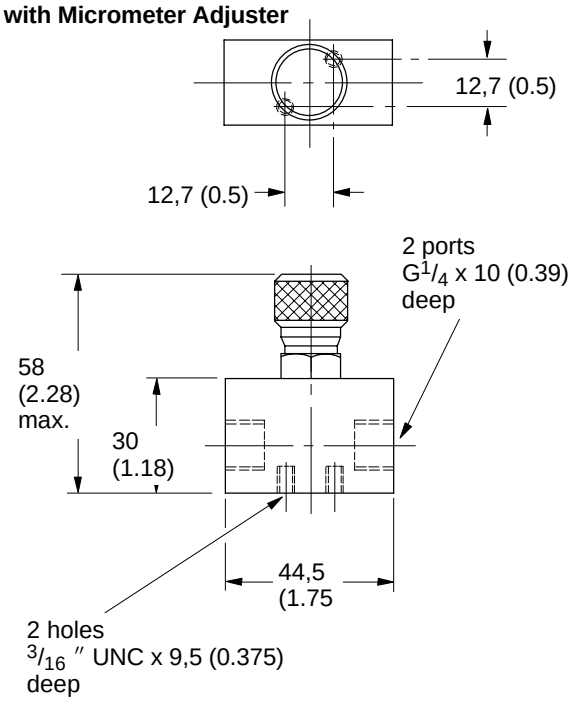

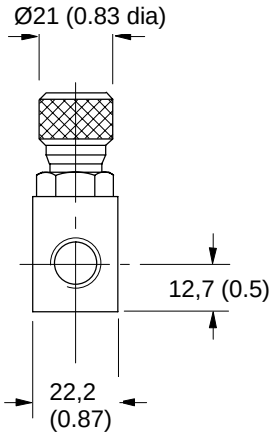

Model (F3-)FN*-4-20
with Screw and Locknut Adjuster

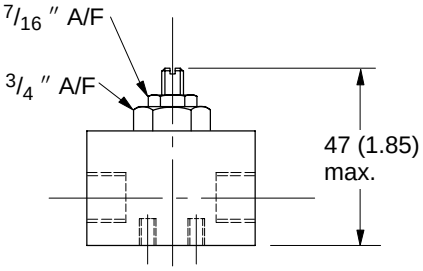

Mass

All models . . . . . 0,2 kg (0.1 lb)

Mounting Attitude

Optional.

Ordering Procedure

Before ordering, check availability with the Vickers representative. Specify complete model designation when ordering:
e.g. 2 off FN1-4K-20 valve.